RFS HYDRAULICS
CREATING OPPORTUNITIES

DIN FITTINGS

RFS Compression Fittings

© 2020 RFS Hydraulics Sdn Bhd.

INDEX

EU
Straight Union 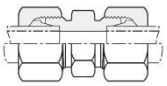 Page 9

EBU
Bulkhead Union 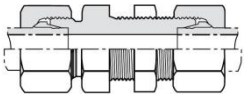 Page 10

EBUW
Weld Bulkhead Union Page 11

EUR
Reducing Union 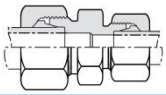 Page 12 - 13

EL
Union Elbow 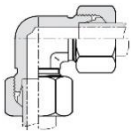 Page 14

EBL
Bulkhead Union Elbow 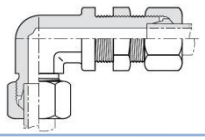 Page 15

ET
Union Tee 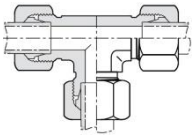 Page 16

ETR
Reducing Tee 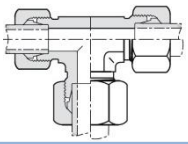 Page 17 - 18

EX
Union Cross 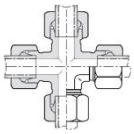 Page 19

ELM-R/MK
Male Elbow (BSPT/Metric Tapered) 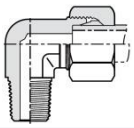 Page 20

EMC-N
Male Connector (NPT Tapered) 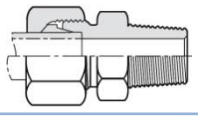 Page 21

EMC-R
Male Connector (BSPT Tapered) 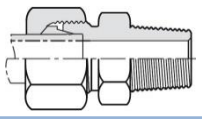 Page 22 - 23

INDEX

EMC-GB
Male Connector (BSPP Parallel)
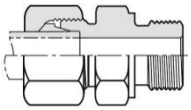
Page 22 - 23

EMC-MK
Male Connector (Metric Tapered)
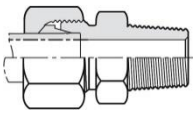
Page 24

EMC-MB
Male Connector (Metric Parallel)
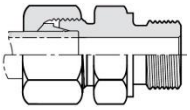
Page 24

EMC-GE
Male Connector (BSPP Parallel with ED Ring)
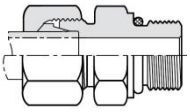
Page 25

EMC-ME
Male Connector (Metric Parallel with ED Ring)
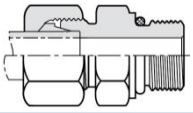
Page 26

EMC-UF
Male Connector (Unified with O-Ring)
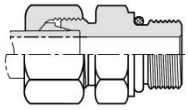
Page 27

EMC-MF
Male Connector (Metric Parallel with O-Ring)
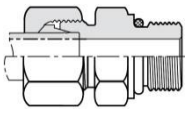
Page 28

EFC-G
Female Connector (BSPP)
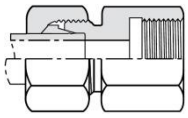
Page 29

EFC-M
Female Connector (Metric Parallel)
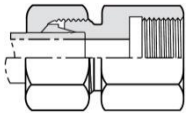
Page 30

EFC-N
Female Connector (NPT Tapered)
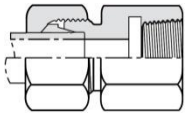
Page 31

EFC-GG
Female Connector (BSPP Parallel with DKI Ring)
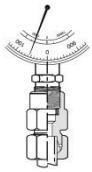
Page 32

INDEX

EGA-GG
Standpipe Female Connector (BSPP Parallel with DKI Ring) 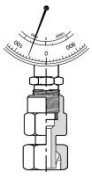 Page 33

EGE-GG
Swivel Female Connector (BSPP Parallel with DKI Ring) 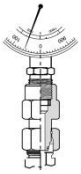 Page 34

DKI
Sealing Ring DKI 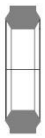 Page 35

EAS
Weld Connector 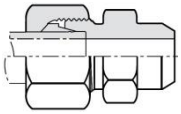 Page 36

EAK
Weld Nipple with O-Ring 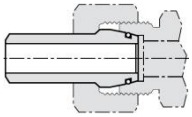 Page 37

EASK
Weld Connector with EAK 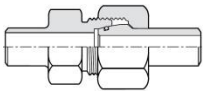 Page 38

EAKR
Reducing Weld Nipple with O-Ring 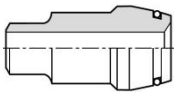 Page 39

ELA
Adjustable Standpipe Elbow 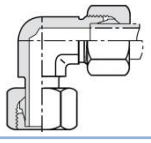 Page 40

EBTA
Adjustable Standpipe Branch Tee 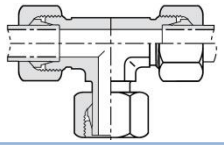 Page 41

ERTA
Adjustable Standpipe Run Tee 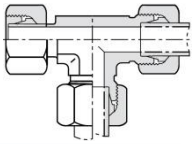 Page 42

ER
Reducer 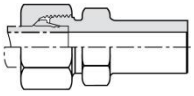 Page 43 - 44

INDEX

EKOR
Adjustable Standpipe Reducer 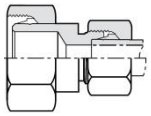 Page 45 - 46

EA-GE
Adjustable Standpipe Male Adapter (BSPP) 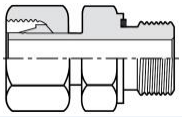 Page 47

EA-ME
Adjustable Standpipe Male Adapter (Metric Parallel) 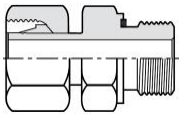 Page 48

EUE
Adjustable Swivel Union 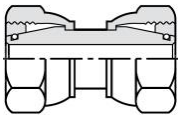 Page 49

EEW
Adjustable Swivel Elbow 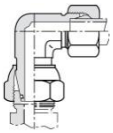 Page 50

EET
Swivel Branch Tee 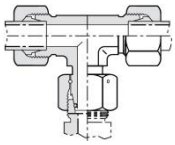 Page 51

EEL
Adjustable Swivel Run Tee 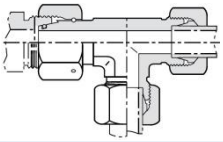 Page 52

ERED
Adjustable Swivel Reducer 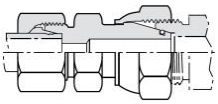 Page 53 - 54

EEGE-GE
Adjustable Swivel Male Adapter (BSPP) 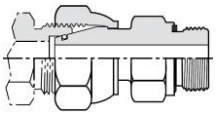 Page 55

EEGE-ME
Adjustable Swivel Male Adapter (Metric Parallel) 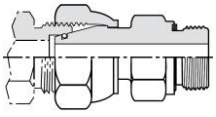 Page 56

EVSTI-GE/ME
Blanking Plugs with ED-Ring 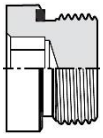 Page 57

INDEX

EVSTI-MF
Blanking Plug with O-Ring 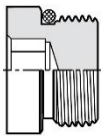 Page 58

EVKA
Tube Port Plug with O-Ring 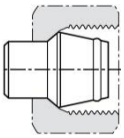 Page 59

ECA
Tube Cap 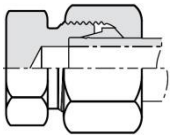 Page 60

EMFAD-GB
Male Female Adapter (BSPP Parallel) 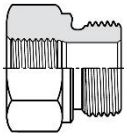 Page 61

EMFAE-GB
Male Female Adapter (BSPP Parallel) 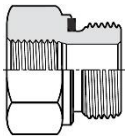 Page 62

EMFAD-GE
Male Female Adapter (BSPP Parallel with ED Ring) 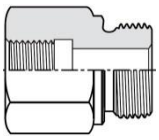 Page 63

EMFAE-GE
Male Female Adapter (BSPP Parallel with ED Ring) 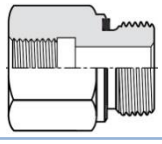 Page 64

EBA-G
Banjo Fitting (BSPP with EKA Ring) 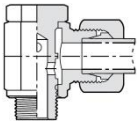 Page 65

EBA-M
Banjo Fitting (Metric Parallel with EKA Ring) 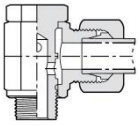 Page 66

EBAH-G
High Pressure Banjo Fitting (BSPP with EKA Ring) 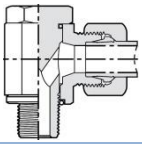 Page 67

EBAH-M
High Pressure Banjo Fitting (Metric Parallel with EKA Ring) 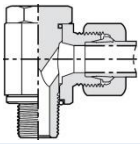 Page 68

INDEX

EBTH-G
Tee High Pressure Banjo Fitting (BSPP with EKA Ring) 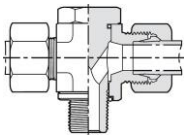 Page 69

EBTH-M
Tee High Pressure Banjo Fitting (Metric Parallel with EKA Ring) 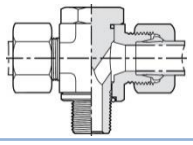 Page 70

EKA
Sealing Ring EKA Page 71

EKAZ
Tee Test Coupling with M16 Connection Page 72

EEMA3
Test Coupling with M16 connection Page 73

EEMA3T
Tee Test Coupling with M16 Connection 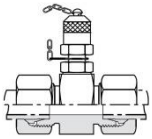 Page 74

9PE
ED Ring Page 75

9PO
Oring Page 76

EN
Nut 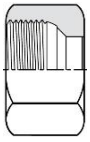 Page 77

ES
Cutting Ring 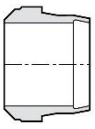 Page 77

Tube Port Dimension 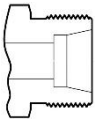 Page 77

DIN2353 COMPRESSION FITTINGS

Dimension Specifications:
DIN2353 & ISO 8434-1

Material Specifications:
Stainless Steel
Steel
Brass

Features:
Size Range: 4 MM to 42 MM
Working Pressure: Up to 800 Bar

Application:
The hydraulic tube fittings are designed for use with the fluid of commercial hydraulic oils

Pressure Range:

Series	Pressure
LL	Up to 100 bar
L	Up to 500 bar
S	Up to 800 bar

Allowable Working Temperature

Material	Working Temperature
Stainless Steel	-60°C to +400°C (DIN 17440)
Steel	-40°C to +120°C (DIN 3859)
Brass	-60°C to +175°C

Pressure Reduction in Temperature

Fitting Material	Temperature Range	Pressure Reduction
Stainless Steel	-60°C to +20°C	-
	-60°C to +50°C	4%
	+ 100°C	11%
	+ 200°C	20%
	+ 300°C	29%
	+ 400°C	33%
Steel	-40°C to + 120°C	-
Brass	-60°C to + 175°C	35%

Straight Union

EU

Connects Tubes

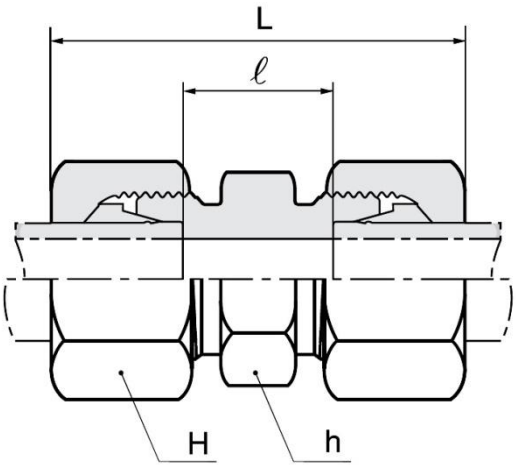

Series	Part No.	Tube O.D.	H	h	L	ℓ
LL PN 100	EU-04LL	4	10	9	31	12
	EU-06LL	6	12	11	32	9
	EU-08LL	8	14	12	35	12
	EU-10LL	10	17	14	35	12
	EU-12LL	12	19	17	35	11
L PN 315	EU-06L	6	14	12	39	10
	EU-08L	8	17	14	40	11
	EU-10L	10	19	17	42	13
	EU-12L	12	22	19	43	14
	EU-15L	15	27	24	46	16
	EU-18L	18	32	27	48	16
PN 160	EU-22L	22	36	32	52	20
	EU-28L	28	41	41	54	21
	EU-35L	35	50	46	63	20
	EU-42L	42	60	55	66	21
S PN 630	EU-06S	6	17	14	45	16
	EU-08S	8	19	17	47	18
	EU-10S	10	22	19	49	17
	EU-12S	12	24	22	51	19
	EU-14S	14	27	24	57	22
PN 400	EU-16S	16	30	27	57	21
	EU-20S	20	36	32	66	23
	EU-25S	25	46	41	74	26
	EU-30S	30	50	46	80	27
PN 315	EU-38S	38	60	55	90	29

Bulkhead Union

EBU

Connects Tubes

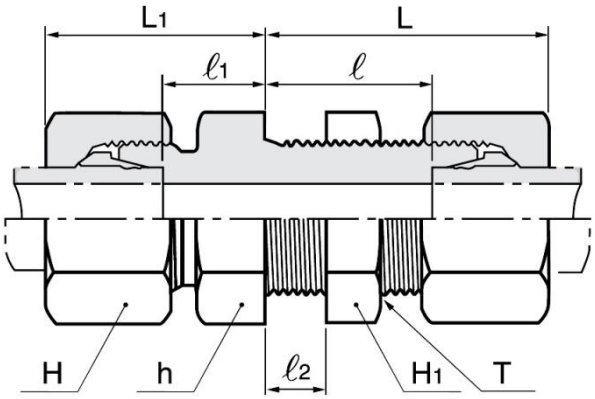

l 2=16mm Max.

Series	Part No.	Tube O.D.	H	H1	h	L	L1	ℓ	ℓ1	T
L PN 315	EBU-06L	6	14	17	17	42	22	27.0	7.0	M12x1.5
	EBU-08L	8	17	19	19	42	23	27.0	8.0	M14x1.5
	EBU-10L	10	19	22	22	43	25	28.0	10.0	M16x1.5
	EBU-12L	12	22	24	24	44	25	29.0	10.0	M18x1.5
	EBU-15L	15	27	30	27	46	27	31.0	12.0	M22x1.5
	EBU-18L	18	32	36	32	49	30	32.5	13.5	M26x1.5
PN 160	EBU-22L	22	36	41	36	51	33	34.5	16.5	M30x2.0
	EBU-28L	28	41	46	41	52	35	35.5	18.5	M36x2.0
	EBU-35L	35	50	55	50	58	40	36.5	18.5	M45x2.0
	EBU-42L	42	60	65	60	59	42	36.0	19.0	M52x2.0
S PN 630	EBU-06S	6	17	19	19	44	27	29.0	12.0	M14x1.5
	EBU-08S	8	19	22	22	44	28	29.0	13.0	M16x1.5
	EBU-10S	10	22	24	24	46	31	29.5	14.5	M18x1.5
	EBU-12S	12	24	27	27	47	31	30.5	14.5	M20x1.5
	EBU-14S	14	27	30	30	50	35	32.0	17.0	M22x1.5
PN 400	EBU-16S	16	30	32	32	50	35	31.5	16.5	M24x1.5
	EBU-20S	20	36	41	41	55	39	33.5	17.5	M30x2.0
	EBU-25S	25	46	46	46	59	44	35.0	20.0	M36x2.0
	EBU-30S	30	50	50	50	64	48	37.5	21.5	M42x2.0
PN 315	EBU-38S	38	60	65	65	68	53	37.0	22.0	M52x2.0

Weld Bulkhead Union

EBUW

Connects Tubes

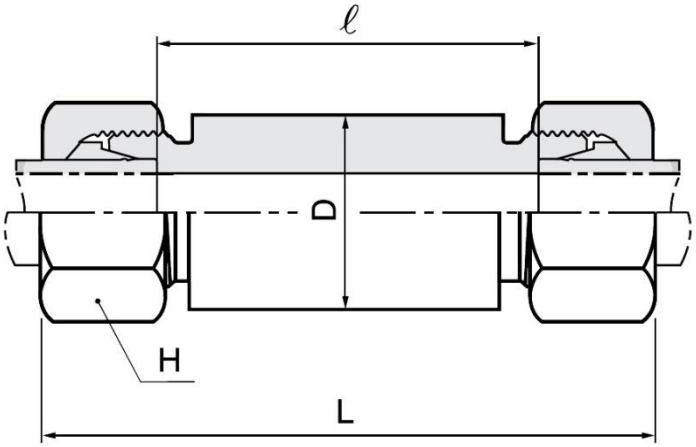

Series	Part No.	Tube O.D.	D	H	L	ℓ
L PN 315	EBUW-06L	6	18	14	85	56
	EBUW-08L	8	20	17	85	56
	EBUW-10L	10	22	19	87	58
	EBUW-12L	12	25	22	87	58
	EBUW-15L	15	28	27	100	70
	EBUW-18L	18	32	32	101	69
PN 160	EBUW-22L	22	36	36	105	73
	EBUW-28L	28	40	41	106	73
	EBUW-35L	35	50	50	114	71
	EBUW-42L	42	60	60	115	70
S PN 630	EBUW-06S	6	20	17	89	60
	EBUW-08S	8	22	19	89	60
	EBUW-10S	10	25	22	91	59
	EBUW-12S	12	28	24	91	59
	EBUW-14S	14	30	27	107	72
PN 400	EBUW-16S	16	35	30	107	71
	EBUW-20S	20	38	36	114	71
	EBUW-25S	25	45	46	120	72
	EBUW-30S	30	50	50	126	73
PN 315	EBUW-38S	38	60	60	133	72

Reducing Union

EUR

Connects Tubes

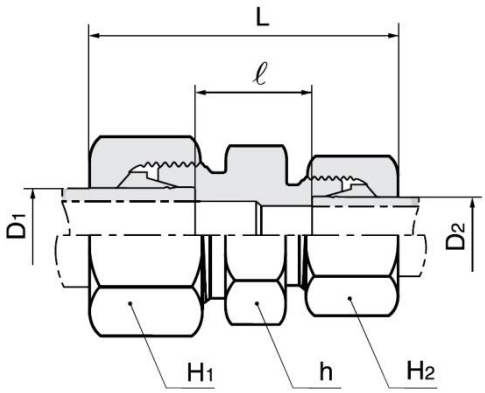

Series	Part No.	Tube O.D.		H1	H2	h	L	ℓ
		D1	D2					
L PN 315	EUR08L-06L	8	6	17	14	14	40	11.0
	EUR10L-06L	10	6	19	14	17	41	12.0
	EUR10L-08L	10	8	19	17	17	41	12.0
	EUR12L-06L	12	6	22	14	19	42	13.0
	EUR12L-08L	12	8	22	17	19	42	13.0
	EUR12L-10L	12	10	22	19	19	43	14.0
	EUR15L-10L	15	10	27	19	24	45	15.0
	EUR15L-12L	15	12	27	22	24	45	15.0
	EUR18L-10L	18	10	32	19	27	46	15.5
	EUR18L-12L	18	12	32	22	27	46	15.5
	EUR18L-15L	18	15	32	27	27	48	16.5
PN 160	EUR22L-12L	22	12	36	22	32	48	17.5
	EUR22L-15L	22	15	36	27	32	50	18.5
	EUR22L-18L	22	18	36	32	32	50	18.0
	EUR28L-18L	28	18	41	32	41	52	19.0
	EUR28L-22L	28	22	41	36	41	54	21.0
	EUR35L-22L	35	22	50	36	46	59	21.0
	EUR35L-28L	35	28	50	41	46	59	21.0

Reducing Union

EUR

Connects Tubes

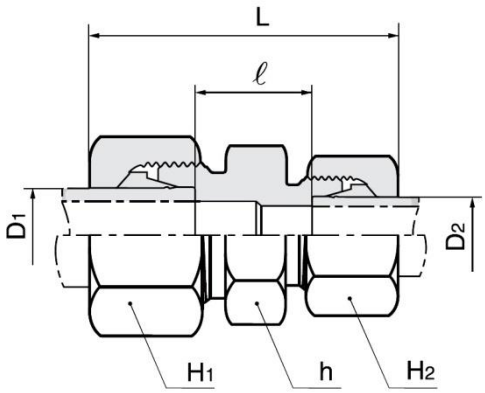

Series	Part No.	Tube O.D.		H1	H2	h	L	ℓ
		D1	D2					
S PN 630	EUR08S-06S	8	6	19	17	17	47	18.0
	EUR10S-06S	10	6	22	17	19	48	17.5
	EUR10S-08S	10	8	22	19	19	48	17.5
	EUR12S-06S	12	6	24	17	22	50	19.5
	EUR12S-08S	12	8	24	19	22	50	19.5
	EUR14S-10S	12	10	24	22	22	51	19.0
	EUR14S-10S	14	10	27	22	24	54	20.5
	EUR14S-12S	14	12	27	24	24	54	20.5
PN 400	EUR16S-12S	16	12	30	24	27	54	20.0
	EUR16S-14S	16	14	30	27	27	57	21.5
	EUR20S-10S	20	10	36	22	32	60	22.0
	EUR20S-12S	20	12	36	24	32	60	22.0
	EUR20S-16S	20	16	36	30	32	63	23.0
	EUR25S-16S	25	16	46	30	41	68	25.0
	EUR25S-20S	25	20	46	36	41	71	25.5
	EUR30S-20S	30	20	50	36	46	74	26.0
	EUR30S-25S	30	25	50	46	46	77	26.5
PN 315	EUR38S-30S	38	30	60	50	55	87	29.5

Union Elbow

EL

Connects Tubes

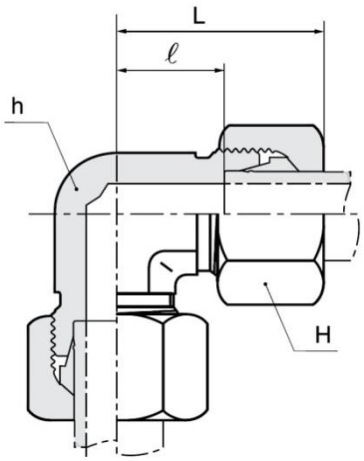

Series	Part No.	Tube O.D.	H	h	L	ℓ
LL PN 100	EL-04LL	4	10	9	21	11.0
	EL-06LL	6	12	9	21	9.5
	EL-08LL	8	14	12	23	11.5
	EL-10LL	10	17	14	24	12.5
	EL-12LL	12	19	17	25	13.0
L PN 315	EL-06L	6	14	12	27	12.0
	EL-08L	8	17	12	29	14.0
	EL-10L	10	19	14	30	15.0
	EL-12L	12	22	17	32	17.0
	EL-15L	15	27	19	36	21.0
	EL-18L	18	32	24	40	23.5
PN 160	EL-22L	22	36	27	44	27.5
	EL-28L	28	41	36	47	30.5
	EL-35L	35	50	41	56	34.5
	EL-42L	42	60	50	63	40.0
S PN 630	EL-06S	6	17	12	31	16.0
	EL-08S	8	19	14	32	17.0
	EL-10S	10	22	17	34	17.5
	EL-12S	12	24	17	38	21.5
	EL-14S	14	27	19	40	22.0
PN 400	EL-16S	16	30	24	43	24.5
	EL-20S	20	36	27	48	26.5
	EL-25S	25	46	36	54	30.0
	EL-30S	30	50	41	62	35.5
PN 315	EL-38S	38	60	50	72	41.0

Bulkhead Union Elbow

EBL

Connects Tubes

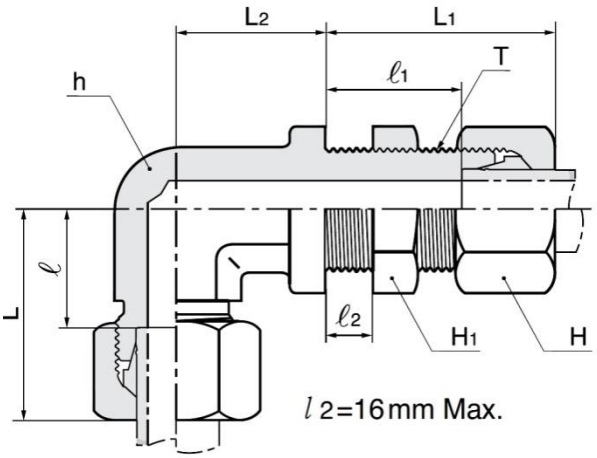

Series	Part No.	Tube O.D	H	H1	h	L	L1	L2	ℓ	ℓ1	T
L PN 315	EBL-06L	6	14	17	12	27	42	14	12.0	27.0	M12x1.5
	EBL-08L	8	17	19	12	29	42	17	14.0	27.0	M14x1.5
	EBL-10L	10	19	22	14	30	43	18	15.0	28.0	M16x1.5
	EBL-12L	12	22	24	17	32	44	20	17.0	29.0	M18x1.5
	EBL-15L	15	27	30	19	36	46	23	21.0	31.0	M22x1.5
	EBL-18L	18	32	36	24	40	49	24	23.5	32.5	M26x1.5
PN 160	EBL-22L	22	36	41	27	44	51	30	27.5	34.5	M30x2.0
	EBL-28L	28	41	46	36	47	52	34	30.5	35.5	M36x2.0
	EBL-35L	35	50	55	41	56	58	39	34.5	36.5	M45x2.0
	EBL-42L	42	60	65	50	63	59	43	40.0	36.0	M52x2.0
S PN 630	EBL-06S	6	17	19	12	31	44	17	16.0	29.0	M14x1.5
	EBL-08S	8	19	22	14	32	44	18	17.0	29.0	M16x1.5
	EBL-10S	10	22	24	17	34	46	20	17.5	29.5	M18x1.5
	EBL-12S	12	24	27	17	38	47	21	21.5	30.5	M20x1.5
	EBL-14S	14	27	30	19	40	50	23	22.0	32.0	M22x1.5
PN 400	EBL-16S	16	30	32	24	43	50	24	24.5	31.5	M24x1.5
	EBL-20S	20	36	41	27	48	55	30	26.5	33.5	M30x2.0
	EBL-25S	25	46	46	36	54	59	34	30.0	35.0	M36x2.0
	EBL-30S	30	50	50	41	62	64	39	35.5	37.5	M42x2.0
PN 315	EBL-38S	38	60	65	50	72	68	43	41.0	37.0	M52x2.0

Union Tee

ET

Connects Tubes

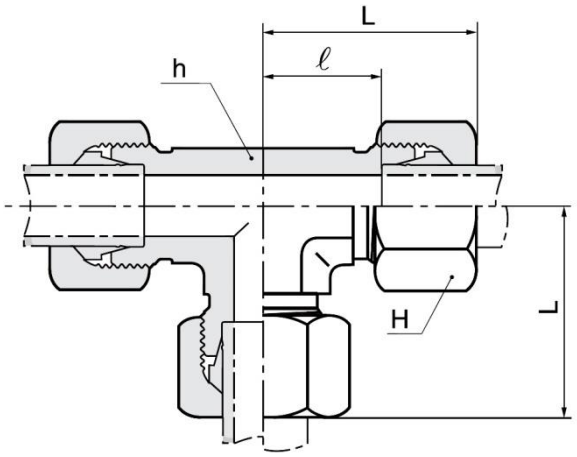

Series	Part No.	Tube O.D.	H	h	L	ℓ
LL PN 100	ET-04LL	4	10	9	21	11.0
	ET-06LL	6	12	9	21	9.5
	ET-08LL	8	14	12	23	11.5
	ET-10LL	10	17	14	24	12.5
	ET-12LL	12	19	14	27	15.0
L PN 315	ET-06L	6	14	12	27	12.0
	ET-08L	8	17	12	29	14.0
	ET-10L	10	19	14	30	15.0
	ET-12L	12	22	17	32	17.0
	ET-15L	15	27	19	36	21.0
	ET-18L	18	32	24	40	23.5
PN 160	ET-22L	22	36	27	44	27.5
	ET-28L	28	41	36	47	30.5
	ET-35L	35	50	41	56	34.5
	ET-42L	42	60	50	63	40.0
S PN 630	ET-06S	6	17	12	31	16.0
	ET-08S	8	19	14	32	17.0
	ET-10S	10	22	17	34	17.5
	ET-12S	12	24	17	38	21.5
	ET-14S	14	27	19	40	22.0
PN 400	ET-16S	16	30	24	43	24.5
	ET-20S	20	36	27	48	26.5
	ET-25S	25	46	36	54	30.0
	ET-30S	30	50	41	62	35.5
PN 315	ET-38S	38	60	50	72	41.0

Reducing Tee

ETR

Connects Tubes

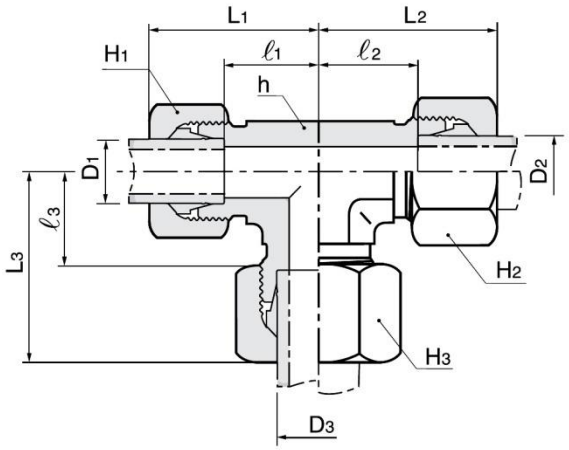

Series	Part No.	Tube O.D.			H1	H2	H3	h	L1	L2	L3	ℓ1	ℓ2	ℓ3
		D1	D2	D3										
L PN 315	ETR06L-06L-08L	6	6	8	14	14	17	14	29	29	29	14	14	14
	ETR08L-08L-06L	8	8	6	17	17	14	14	29	29	29	14	14	14
	ETR06L-06L-10L	6	6	10	14	14	19	14	30	30	30	15	15	15
	ETR08L-08L-10L	8	8	10	17	17	19	14	30	30	30	15	15	15
	ETR10L-10L-06L	10	10	6	19	19	14	14	30	30	30	15	15	15
	ETR10L-10L-08L	10	10	8	19	19	17	14	30	30	30	15	15	15
	ETR10L-06L-10L	10	6	10	14	14	19	14	30	30	30	15	15	15
	ETR08L-08L-12L	8	8	12	17	17	22	17	32	32	32	17	17	17
	ETR12L-12L-06L	12	12	6	22	22	14	17	32	32	32	17	17	17
	ETR12L-08L-08L	12	8	8	17	17	17	17	32	32	32	17	17	17
	ETR12L-12L-08L	12	12	8	22	22	17	17	32	32	32	17	17	17
	ETR12L-10L-10L	12	10	10	19	19	19	17	32	32	32	17	17	17
	ETR12L-12L-10L	12	12	10	22	22	19	17	32	32	32	17	17	17
	ETR12L-10L-12L	12	10	12	19	19	22	17	32	32	32	17	17	17
	ETR10L-10L-15L	10	10	15	19	19	27	19	36	36	36	17	17	17
	ETR12L-12L-15L	12	12	15	22	22	27	19	36	36	36	21	21	21
	ETR15L-15L-06L	15	15	6	27	27	14	19	36	36	36	21	21	21
	ETR15L-15L-10L	15	15	10	27	27	19	19	36	36	36	21	21	21
	ETR15L-12L-12L	15	12	12	22	22	22	19	36	36	36	21	21	21
	ETR15L-15L-12L	15	15	12	27	27	22	19	36	36	36	21	21	21
	ETR15L-12L-15L	15	12	15	22	22	27	19	36	36	36	21	21	21
	ETR12L-12L-18L	12	12	18	22	22	32	24	39	39	40	24	24	23.5
	ETR18L-10L-10L	18	10	10	19	19	19	24	40	39	39	23.5	24	24
	ETR18L-18L-10L	18	18	10	32	32	19	24	40	40	39	23.5	23.5	24
	ETR18L-18L-12L	18	18	12	32	32	22	24	40	40	39	23.5	23.5	24
	ETR18L-18L-15L	18	18	15	32	32	27	24	40	40	39	23.5	23.5	24
	ETR18L-10L-18L	18	10	18	19	19	32	24	40	39	40	23.5	24	24

Reducing Tee

ETR

Connects Tubes

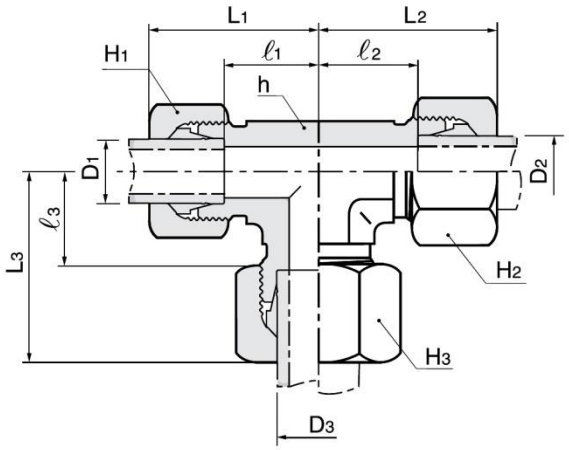

Series	Part No.	Tube O.D.			H1	H2	H3	h	L1	L2	L3	ℓ1	ℓ2	ℓ3
		D1	D2	D3										
L PN 160	ETR22L-22L-10L	22	22	10	36	36	19	27	44	44	43	27.5	27.5	23.5
	ETR22L-22L-12L	22	22	12	36	36	22	27	44	44	43	27.5	27.5	28
	ETR22L-15L-15L	22	15	15	27	27	27	27	44	43	43	27.5	28	28
	ETR22L-22L-15L	22	22	15	36	36	27	27	44	44	43	27.5	27.5	28
	ETR22L-18L-18L	22	18	18	32	32	32	27	44	44	44	27.5	27.5	28
	ETR22L-22L-18L	22	22	18	36	36	32	27	44	44	44	27.5	27.5	27.5
	ETR22L-18L-22L	22	18	22	32	32	36	27	44	44	44	27.5	27.5	27.5
	ETR28L-28L-10L	28	28	10	41	41	19	36	47	44	46	30.5	30.5	31
	ETR28L-28L-12L	28	28	12	41	41	22	36	47	47	46	30.5	30.5	31
	ETR28L-28L-15L	28	28	15	41	41	27	36	47	47	46	30.5	30.5	31
	ETR28L-28L-18L	28	28	18	41	41	32	36	47	47	47	30.5	30.5	30.5
	ETR28L-22L-22L	28	22	22	41	36	36	36	47	47	47	30.5	30.5	30.5
	ETR28L-28L-22L	28	28	22	41	41	36	36	47	47	47	30.5	30.5	30.5
S PN 630	ETR10S-10S-06S	10	10	6	22	22	17	17	34	34	33	17.5	17.5	18
	ETR12S-08S-08S	12	8	8	24	19	19	17	38	37	37	21.5	22	22
	ETR12S-12S-08S	12	12	8	24	24	19	17	38	38	37	21.5	21.5	22
	ETR12S-12S-10S	12	12	10	24	24	22	17	38	38	38	21.5	21.5	21.5
S PN 400	ETR12S-12S-16S	12	12	16	24	24	30	24	42	42	43	25.5	25.5	24.5
	ETR16S-16S-06S	16	16	6	30	30	17	24	43	43	41	24.5	24.5	26
	ETR16S-16S-08S	16	16	8	30	30	19	24	43	43	41	24.5	24.5	26
	ETR16S-16S-10S	16	16	10	30	30	22	24	43	43	42	24.5	24.5	25.5
	ETR16S-16S-12S	16	16	12	30	30	24	24	43	43	42	24.5	24.5	25.5
	ETR16S-16S-20S	16	16	20	30	30	36	27	47	47	48	28.5	28.5	26.5
	ETR20S-20S-10S	20	20	10	36	36	22	27	48	48	46	26.5	26.5	29.5
	ETR20S-20S-12S	20	20	12	36	36	24	27	48	48	46	26.5	26.5	29.5
	ETR20S-20S-16S	20	20	16	36	36	30	27	48	48	47	26.5	26.5	28.5
	ETR20S-20S-25S	20	20	25	36	36	46	36	53	53	54	31.5	31.5	30
	ETR25S-25S-16S	25	25	16	46	46	30	36	54	54	52	30	30	33.5
	ETR25S-25S-20S	25	25	20	46	46	36	36	54	54	53	30	30	31.5
	ETR25S-25S-30S	25	25	30	46	46	50	41	61	61	62	37	37	35.5

Union Cross

EX

Connects Tubes

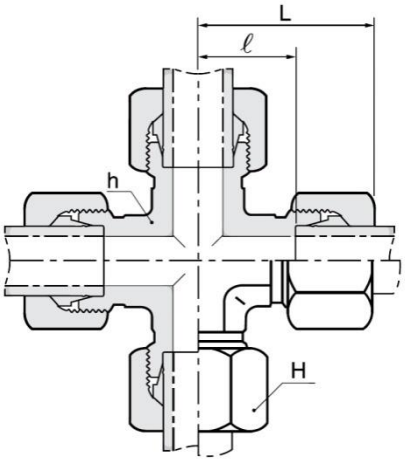

Series	Part No.	Tube O.D.	H	h	L	ℓ
LL PN 100	EX-04LL	4	10	9	21	11.0
	EX-06LL	6	12	9	21	9.5
	EX-08LL	8	14	12	23	11.5
	EX-10LL	10	17	14	24	12.5
	EX-12LL	12	19	14	27	15.0
L PN 315	EX-06L	6	14	12	27	12.0
	EX-08L	8	17	12	29	14.0
	EX-10L	10	19	14	30	15.0
	EX-12L	12	22	17	32	17.0
	EX-15L	15	27	19	36	21.0
	EX-18L	18	32	24	40	23.5
PN 160	EX-22L	22	36	27	44	27.5
	EX-28L	28	41	36	47	30.5
	EX-35L	35	50	41	56	34.5
	EX-42L	42	60	50	63	40.0
S PN 630	EX-06S	6	17	12	31	16.0
	EX-08S	8	19	14	32	17.0
	EX-10S	10	22	17	34	17.5
	EX-12S	12	24	17	38	21.5
	EX-14S	14	27	19	40	22.0
PN 400	EX-16S	16	30	24	43	24.5
	EX-20S	20	36	27	48	26.5
	EX-25S	25	46	36	54	30.0
	EX-30S	30	50	41	62	35.5
PN 315	EX-38S	38	60	50	72	41.0

Male Elbow (BSPT/Metric Tapered)

ELM-R/MK

Connects Tube to Female Port

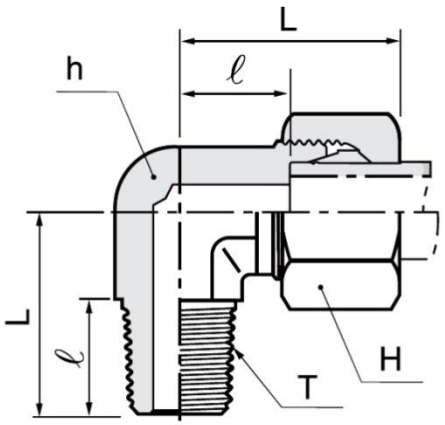

From C stud end

Series	Part No.		Tube O.D.	H	h	L	L1	ℓ	T Metric Taper	ℓ1	T R(PT)	ℓ1
	R	MK										
LL PN 100	ELM04LL-01R	ELM04LL-8MK	4	10	9	21	17	11.0	M8 x 1.0 Keg	8	1/8"	10
	ELM06LL-01R	ELM06LL-10MK	6	12	9	21	17	9.5	M10 x 1.0 Keg	8	1/8"	10
	ELM08LL-01R	ELM08LL-10MK	8	14	12	23	20	11.5	M10 x 1.0 Keg	8	1/8"	10
	ELM10LL-02R	-	10	17	14	24	23	12.5	-	-	1/4"	14
	ELM12LL-02R	-	12	19	17	25	23	13.0	-	-	1/4"	14
L PN 315	ELM06L-01R	ELM06L-10MK	6	14	12	27	20	12.0	M10 x 1.0 Keg	8	1/8"	10
	ELM08L-02R	ELM08L-12MK	8	17	12	29	26	14.0	M12 x 1.5 Keg	12	1/4"	14
	ELM10L-02R	ELM10L-14MK	10	19	14	30	27	15.0	M14 X 1.5 Keg	12	1/4"	14
	ELM12L-03R	ELM12L-16MK	12	22	17	32	28	17.0	M16 X 1.5 Keg	14	3/8"	15
	ELM15L-04R	ELM15L-18MK	15	27	19	36	34	21.0	M18 X 1.5 Keg	14	1/2"	19
	ELM18L-04R	ELM18L-22MK	18	32	24	40	36	23.5	M22 X 1.5 Keg	17	1/2"	19
S PN 630	ELM06S-02R	ELM06S-12MK	6	17	12	31	26	16.0	M12 x 1.5 Keg	12	1/4"	14
	ELM08S-02R	ELM08S-14MK	8	19	14	32	27	17.0	M14 x 1.5 Keg	12	1/4"	14
	ELM10S-03R	ELM10S-16MK	10	22	17	34	28	17.5	M16 x 1.5 Keg	12	3/8"	15
	ELM12S-03R	ELM12S-18MK	12	24	17	38	28	21.5	M18 x 1.5 Keg	12	3/8"	15
	ELM14S-04R	ELM14S-20MK	14	27	19	40	32	22.0	M20 x 1.5 Keg	14	1/2"	19
	ELM16S-04R	ELM16S-22MK	16	30	24	43	32	24.5	M22 x 1.5 Keg	17	1/2"	19

Male Connector (NPT Tapered)

EMC-N

Connects Tube to Female Port

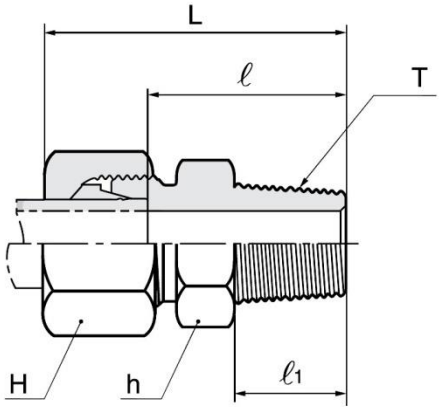

From C stud end

Series	Part No.	Tube O.D.	H	h	L	ℓ	ℓ1	T N(NPT)
LL PN 100	EMC04LL-01N	4	10	11	28	18.5	9.9	1/8-27.0
	EMC06LL-01N	6	12	11	28	16.5	9.9	1/8-27.0
	EMC08LL-01N	8	14	12	30	18.5	9.9	1/8-27.0
L PN 315	EMC06L-01N	6	14	12	32	17.0	9.9	1/8-27.0
	EMC06L-02N	6	14	17	38	23.0	14.2	1/4-18.0
	EMC08L-02N	8	17	17	38	23.0	14.2	1/4-18.0
	EMC10L-02N	10	19	17	39	24.0	14.2	1/4-18.0
	EMC10L-03N	10	19	19	40	25.0	14.2	3/8-18.0
	EMC12L-02N	12	22	19	40	25.0	14.2	1/4-18.0
	EMC12L-03N	12	22	19	40	25.0	14.2	3/8-18.0
	EMC12L-04N	12	22	22	45	30.0	19.1	1/2-14.0
	EMC15L-04N	15	27	24	46	31.0	19.1	1/2-14.0
	EMC18L-04N	18	32	27	48	31.5	19.1	1/2-14.0
PN 160	EMC22L-06N	22	36	32	50	33.5	19.1	3/4-14.0
	EMC28L-08N	28	41	41	56	39.5	23.9	1-11.5
	EMC35L-10N	35	50	46	62	40.5	23.9	1 1/4-11.5
	EMC42L-12N	42	60	55	65	42.0	25.4	1 1/2-11.5
S PN 630	EMC06S-02N	6	17	17	43	28.0	14.2	1/4-18.0
	EMC08S-02N	8	19	17	43	28.0	14.2	1/4-18.0
	EMC10S-02N	10	22	19	44	27.5	14.2	1/4-18.0
	EMC10S-03N	10	22	19	44	27.5	14.2	3/8-18.0
	EMC12S-02N	12	24	22	46	29.5	14.2	1/4-18.0
	EMC12S-03N	12	24	22	46	29.5	14.2	3/8-18.0
	EMC12S-04N	12	24	22	51	34.5	19.1	1/2-14.0
PN 400	EMC14S-04N	14	27	24	54	36.0	19.1	1/2-14.0
	EMC16S-04N	16	30	27	54	35.5	19.1	1/2-14.0
	EMC20S-06N	20	36	32	59	37.5	19.1	3/4-14.0
	EMC25S-08N	25	46	41	69	45.0	23.9	1-11.5
	EMC30S-10N	30	50	46	73	46.5	23.9	1 1/4-11.5
PN 315	EMC38S-12N	38	60	55	80	49.0	25.4	1 1/2-11.5

Male Connector (BSPT Tapered)

EMC-R

Connects Tube to Female Port

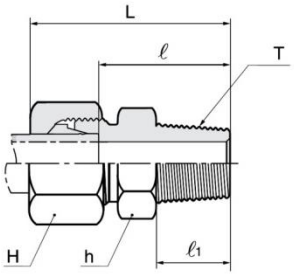

From C stud end

Male Connector (BSPP Paralled)

EMC-GB

Connects Tube to Female Port

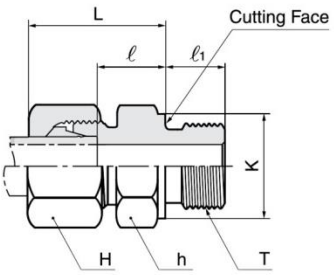

From B stud end

Series	Part No.	Tube O.D.	H	h	K	L	ℓ	ℓ1	T R(PT), G(PF)
LL PN 100	EMC04LL-01R	4	10	11	-	26.0	16.0	8	PT 1/8
	EMC06LL-01R	6	12	11	-	26.0	14.5	8	PT 1/8
	EMC08LL-01R	8	14	12	-	28.0	16.5	8	PT 1/8
	EMC08LL-02R	8	14	14	-	32.0	20.5	12	PT 1/4
	EMC10LL-02R	10	17	14	-	32.0	20.5	12	PT 1/4
	EMC12LL-02R	12	19	17	-	32.0	20.0	12	PT 1/4
	EMC12LL-03R	12	19	17	-	32.0	20.0	12	PT 3/8
L PN 315	EMC06L-01GB	6	14	14	14	23.0	8.5	8	PF 1/8
	EMC06L-01R	6	14	12	-	30.0	15.0	8	PT 1/8
	EMC06L-02GB	6	14	19	18	25.0	10.0	12	PF 1/4
	EMC06L-03GB	6	14	22	22	26.0	11.5	12	PF 3/8
	EMC06L-04GB	6	14	27	26	27.0	12.0	14	PF 1/2
	EMC08L-01GB	8	17	14	14	23.0	8.5	8	PF 1/8
	EMC08L-02GB	8	17	19	18	25.0	10.0	12	PF 1/4
	EMC08L-02R	8	17	17	-	35.0	20.0	12	PT 1/4
	EMC08L-03GB	8	17	22	22	26.0	11.5	12	PF 3/8
	EMC08L-04GB	8	17	27	26	27.0	12.0	14	PF 1/2
	EMC10L-02GB	10	19	19	18	26.0	11.0	12	PF 1/4
	EMC10L-02R	10	19	17	-	36.0	21.0	12	PT 1/4
	EMC10L-03GB	10	19	22	22	27.0	12.5	12	PF 3/8
	EMC10L-04GB	10	19	27	26	28.0	13.0	14	PF 1/2
	EMC12L-02GB	12	22	19	18	27.0	12.0	12	PF 1/4
	EMC12L-02R	12	22	19	-	37.0	22.0	12	PT 1/4
	EMC12L-03GB	12	22	22	22	27.0	12.5	12	PF 3/8
	EMC12L-03R	12	22	19	-	37.0	22.0	12	PT 3/8
	EMC12L-04GB	12	22	27	26	28.0	13.0	14	PF 1/2
	EMC12L-04R	12	22	24	-	39.0	24.0	14	PT 1/2
	EMC12L-06GB	12	22	32	32	29.0	14.0	16	PF 3/4
	EMC15L-03GB	15	27	24	22	29.0	13.5	12	PF 3/8
	EMC15L-03R	15	27	24	-	38.0	23.0	12	PT 3/8
	EMC15L-04GB	15	27	27	26	29.0	14.0	14	PF 1/2
	EMC15L-04R	15	27	24	-	40.0	25.0	14	PT 1/2
	EMC15L-06GB	15	27	32	32	30.0	15.0	16	PF 3/4
	EMC18L-03GB	18	32	27	22	29.5	14.0	12	PF 3/8
	EMC18L-04GB	18	32	27	26	31.0	14.5	14	PF 1/2
	EMC18L-04R	18	32	27	-	41.0	25.5	14	PT 1/2
	EMC18L-06GB	18	32	32	32	30.0	14.5	16	PF 3/4
PN 160	EMC22L-04GB	22	36	32	26	33.0	16.5	14	PF 1/2
	EMC22L-06R	22	36	32	-	46.0	29.5	16	PT 3/4
	EMC22L-06GB	22	36	32	32	33.0	16.5	16	PF 3/4
	EMC28L-06GB	28	41	41	32	34.0	17.5	16	PF 3/4
	EMC28L-08GB	28	41	41	39	34.0	17.5	18	PF 1
	EMC28L-10GB	35	50	50	49	39.0	17.5	20	PF 1 1/4
	EMC35L-08GB	35	50	46	39	39.0	17.5	18	PF1
	EMC42L-12GB	42	60	55	55	42.0	19.0	22	PF 1 1/2

Male Connector (BSPT Tapered)

EMC-R

Connects Tube to Female Port

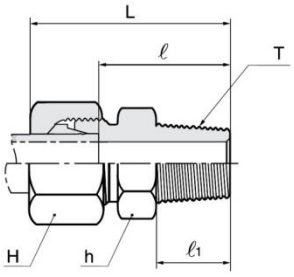

From C stud end

Series	Part No.	Tube O.D.	H	h	K	L	ℓ	ℓ1	T R(PT), G(PF)
S PN 630	EMC6S-02GB	6	17	19	18	28	13.0	12	PF 1/4
	EMC6S-04GB	6	17	27	26	33	18.0	14	PF 1/2
	EMC8S-02GB	8	19	19	18	30	15.0	12	PF 1/4
	EMC8S-03GB	8	19	22	22	30	15.5	12	PF 3/8
	EMC10S-02GB	10	22	19	18	31	14.5	12	PF 1/4
	EMC10S-03GB	10	22	22	22	31	15.0	12	PF 3/8
	EMC10S-04GB	10	22	27	26	34	17.5	14	PF 1/2
	EMC12S-02GB	12	24	22	18	33	16.5	12	PF 1/4
	EMC12S-03GB	12	24	22	22	33	17.0	12	PF 3/8
	EMC12S-04GB	12	24	27	26	34	17.5	14	PF 1/2
	EMC14S-03GB	14	27	24	22	36	18.5	12	PF 3/8
	EMC14S-04GB	14	27	27	26	37	19.0	14	PF 1/2
PN 400	EMC16S-03GB	16	30	27	22	36	18.0	12	PF 3/8
	EMC16S-04GB	16	30	27	26	37	18.5	14	PF 1/2
	EMC16S-06GB	16	30	32	32	39	20.5	16	PF 3/4
	EMC20S-04GB	20	36	32	26	42	20.5	14	PF 1/2
	EMC20S-06GB	20	36	32	32	42	20.5	16	PF 3/4
	EMC25S-06GB	25	46	41	32	47	23.0	16	PF 3/4
	EMC25S-08GB	25	46	41	39	47	23.0	18	PF 1
PN 250	EMC30S-08GB	30	50	46	39	50	23.5	18	PF 1
	EMC30S-10GB	30	50	50	49	50	23.5	20	PF 1 1/4
	EMC38S-10GB	38	60	55	49	57	26.0	20	PF 1 1/4
	EMC38S-12GB	38	60	55	55	57	26.0	22	PF 1 1/2

Male Connector (BSPP Paralled)

EMC-GB

Connects Tube to Female Port

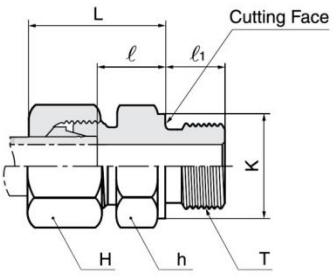

From B stud end

Male Connector (Metric Tapered)

EMC-MK

Connects Tube to Female Port

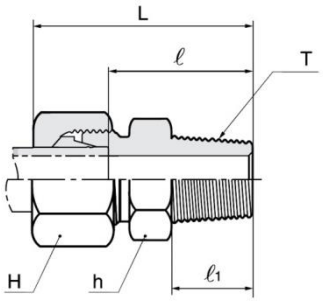

From C stud end

Male Connector (Metric Parallel)

EMC-MB

Connects Tube to Female Port

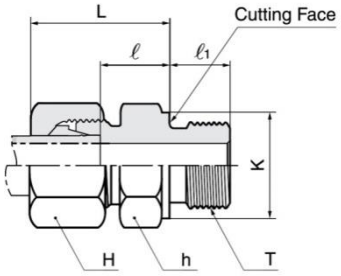

From B stud end

Series	Part No.	Tube O.D.	H	h	K	L	ℓ	ℓ1	T
LL PN 100	EMC04LL-6MK	4	10	9	-	26	16.0	8	M6x1.0Keg
	EMC04LL-8MK	4	10	10	-	26	16.0	8	M8x1.0Keg
	EMC06LL-10MK	6	12	11	-	26	14.5	8	M10x1.0Keg
	EMC08LL-10MK	8	14	12	-	28	16.5	8	M10x1.0Keg
L PN 315	EMC06L-10MB	6	14	14	14	23	8.5	8	M10x1.0
	EMC08L-12MB	8	17	17	17	25	10.0	12	M12x1.5
	EMC08L-18MB	8	17	24	23	26	11.5	12	M18x1.5
	EMC10L-14MB	10	19	19	19	26	11.0	12	M14x1.5
	EMC10L-16MB	10	19	22	21	27	12.0	12	M16x1.5
	EMC10L-18MB	10	19	24	23	27	12.5	12	M18x1.5
	EMC10L-22MB	10	19	27	27	29	14.0	14	M22x1.5
	EMC12L-14MB	12	22	19	19	26	11.0	12	M14x1.5
	EMC12L-16MB	12	22	22	21	27	12.5	12	M16x1.5
	EMC12L-18MB	12	22	24	23	27	12.5	12	M18x1.5
	EMC12L-22MB	12	22	27	27	29	14.0	14	M22x1.5
	EMC15L-16MB	15	27	24	21	28	13.0	12	M16x1.5
	EMC15L-18MB	15	27	24	23	29	13.5	12	M18x1.5
	EMC15L-22MB	15	27	27	27	30	15.0	14	M22x1.5
	EMC18L-18MB	18	32	27	23	30	14.0	12	M18x1.5
	EMC18L-22MB	18	32	27	27	31	14.5	14	M22x1.5
PN 160	EMC22L-22MB	22	36	27	27	33	16.5	14	M22x1.5
	EMC22L-26MB	22	36	32	31	33	16.5	16	M26x1.5
	EMC28L-33MB	28	41	32	39	34	17.5	18	M33x2.0
	EMC35L-42MB	35	50	41	49	39	17.5	20	M42x2.0
	EMC42L-48MB	42	60	50	55	42	19.0	22	M48x2.0
S PN 630	EMC06S-12MB	6	17	55	17	28	13.0	12	M12x1.5
	EMC08S-14MB	8	19	17	19	30	15.0	12	M14x1.5
	EMC10S-16MB	10	22	19	21	31	15.0	12	M16x1.5
	EMC12S-18MB	12	24	22	23	33	17.0	12	M18x1.5
	EMC12S-22MB	12	24	24	27	34	17.5	14	M22x1.5
	EMC14S-20MB	14	27	27	25	37	19.0	14	M20x1.5
PN 400	EMC16S-18MB	16	30	27	23	36	18.0	12	M18x1.5
	EMC16S-22MB	16	30	27	27	37	18.5	14	M22x1.5
	EMC20S-27MB	20	36	32	32	42	20.5	16	M27x2.0
	EMC25S-33MB	25	46	41	39	47	23.0	18	M33x2.0
PN 250	EMC30S-42MB	30	50	50	49	50	23.5	20	M42x2.0
	EMC38S-48MB	38	60	55	55	57	26.0	22	M48x2.0

Male Connector (BSPP Parallel) with ED-Ring

EMC-GE

Connect Tube to Female Port

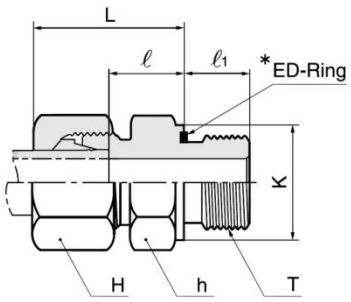

From B stud end

Series	Part No.	Tube O.D.	H	h	K	L	ℓ	ℓ1	T G(PF)
L PN 315	EMC06L-01GE	6	14	14	14	23	8.5	8	1/8"
	EMC06L-02GE	6	14	19	19	25	10.0	12	1/4"
	EMC08L-01GE	8	17	14	14	24	9.5	8	1/8"
	EMC08L-02GE	8	17	19	19	25	10.0	12	1/4"
	EMC08L-03GE	8	17	22	22	26	11.5	12	3/8"
	EMC10L-02GE	10	19	19	19	26	11.0	12	1/4"
	EMC10L-03GE	10	19	22	22	27	12.5	14	3/8"
	EMC10L-04GE	10	19	27	27	28	13.0	12	1/2"
	EMC12L-02GE	12	22	19	19	27	12.0	12	1/4"
	EMC12L-03GE	12	22	22	22	27	12.5	14	3/8"
	EMC12L-04GE	12	22	27	27	28	13.0	12	1/2"
	EMC15L-03GE	15	27	24	22	29	13.5	14	3/8"
	EMC15L-04GE	15	27	27	27	29	14.0	14	1/2"
	EMC18L-04GE	18	32	27	27	31	14.5	16	1/2"
	EMC18L-06GE	18	32	32	32	31	14.5	16	3/4"
PN 160	EMC22L-06GE	22	36	32	32	33	16.5	18	3/4"
	EMC28L-08GE	28	41	41	40	34	17.5	20	1"
	EMC35L-10GE	35	50	50	50	39	17.5	22	1 1/4"
	EMC42L-12GE	42	60	55	55	42	19.0	12	1 1/2"
S PN 630	EMC06S-02GE	6	17	19	19	28	13.0	12	1/4"
	EMC08S-02GE	8	19	19	19	30	15.0	12	1/4"
	EMC08S-03GE	8	19	22	22	30	15.5	12	3/8"
	EMC10S-02GE	10	22	19	19	31	14.5	12	1/4"
	EMC10S-03GE	10	22	27	22	31	15.0	12	3/8"
	EMC10S-04GE	10	22	22	27	34	17.5	14	1/2"
	EMC12S-02GE	12	24	22	19	33	16.5	12	1/4"
	EMC12S-03GE	12	24	22	22	33	17.0	12	3/8"
	EMC12S-04GE	12	24	27	32	34	17.5	14	1/2"
	EMC14S-04GE	14	27	27	27	37	19.0	14	1/2"
PN 400	EMC16S-03GE	16	30	27	22	36	18.0	12	3/8"
	EMC16S-04GE	16	30	27	27	37	18.5	14	1/2"
	EMC16S-06GE	16	30	32	27	39	20.5	16	3/4"
	EMC20S-06GE	20	36	32	32	42	20.5	16	3/4"
	EMC25S-04GE	25	46	41	27	47	23.0	14	1/2"
	EMC25S-06GE	25	46	41	32	47	23.0	16	3/4"
	EMC25S-08GE	25	46	41	40	47	23.0	18	1"
	EMC30S-10GE	30	50	50	50	50	23.5	20	1 1/4"
PN 315	EMC38S-12GE	38	60	55	55	57	26.0	22	1 1/2"

Male Connector (Metric Parallel) with ED-Ring

EMC-ME

Connects Tube to Female Port

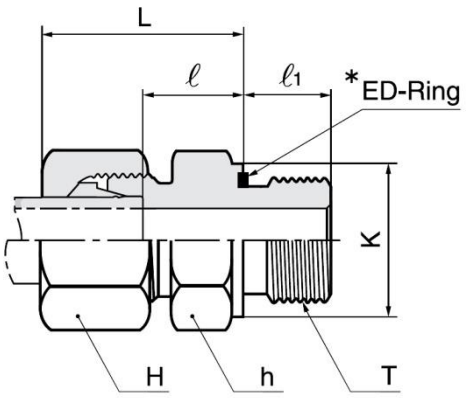

From B stud end

Series	Part No.	Tube O.D.	H	h	K	L	ℓ	ℓ1	T M(METRIC)
L PN 315	EMC06L-10ME	6	14	14	14	23	8.5	8	M10x1.0
	EMC08L-12ME	8	17	17	17	25	10.0	12	M12x1.5
	EMC10L-14ME	10	19	19	19	26	11.0	12	M14x1.5
	EMC12L-16ME	12	22	22	22	27	12.5	12	M16x1.5
	EMC12L-18ME	12	22	24	24	27	12.5	12	M18x1.5
	EMC12L-22ME	12	22	27	27	29	14.0	14	M22x1.5
	EMC15L-18ME	15	27	24	24	29	13.5	12	M18x1.5
	EMC15L-22ME	15	27	27	27	30	15.0	14	M22x1.5
	EMC18L-22ME	18	32	27	27	31	14.5	14	M22x1.5
PN 160	EMC22L-26ME	22	36	32	32	33	16.5	16	M26x1.5
	EMC28L-33ME	28	41	41	40	34	17.5	18	M33x2.0
	EMC35L-42ME	35	50	50	50	39	17.5	20	M42x2.0
	EMC42L-48ME	42	60	55	55	42	19.0	22	M48x2.0
S PN 630	EMC06S-12ME	6	17	17	17	28	13.0	12	M12x1.5
	EMC08S-14ME	8	19	19	19	30	15.0	12	M14x1.5
	EMC10S-16ME	10	22	22	22	31	15.0	12	M16x1.5
	EMC12S-18ME	12	24	24	24	33	17.0	12	M18x1.5
	EMC14S-20ME	14	27	27	26	37	19.0	14	M20x1.5
PN 400	EMC16S-22ME	16	30	27	27	37	18.5	14	M22x1.5
	EMC20S-27ME	20	36	32	32	42	20.5	16	M27x2.0
	EMC25S-33ME	25	46	41	40	47	23.0	18	M33x2.0
	EMC30S-42ME	30	50	50	50	50	23.5	20	M42x2.0
PN 315	EMC38S-48ME	38	60	55	55	57	26.0	22	M48x2.0

Male Connector (Unified) with O-Ring

EMC-UF

Connects Tube to Female Port

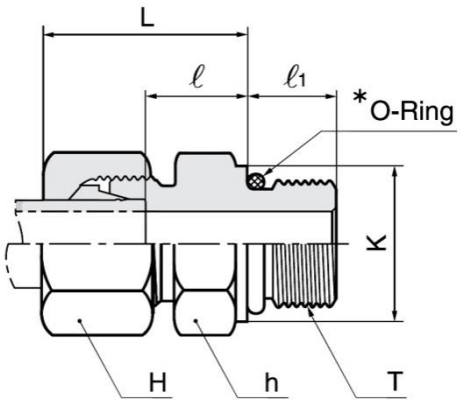

From F stud end

Series	Part No.	Tube O.D.	H	h	K	L	ℓ1	ℓ	T U (Unified)
L PN 315	EMC08L-4UF	8	17	17	14.4	25	9.0	10.0	7/16-20 UNF-2A
	EMC10L-4UF	10	19	17	14.4	26	10.0	11.0	7/16-20 UNF-2A
	EMC12L-6UF	12	22	19	17.6	26	10.0	11.0	9/16-18 UNF-2A
	EMC12L-8UF	12	22	24	22.3	28	11.0	13.0	3/4/2016 UNF-2A
	EMC12L-10UF	12	22	27	25.5	29	12.7	14.3	7/8/2014 UNF-2A
	EMC15L-8UF	15	27	24	22.3	29	11.0	14.0	3/4/2016 UNF-2A
	EMC15L-10UF	15	27	27	25.5	30	12.7	15.3	7/8/2014 UNF-2A
	EMC18L-8UF	18	32	27	22.3	31	11.0	14.5	3/4/2016 UNF-2A
	EMC18L-10UF	18	32	27	25.5	31	12.7	14.8	7/8/2014 UNF-2A
PN 160	EMC22L-10UF	22	36	32	25.5	33	12.7	16.8	7/8/2014 UNF-2A
	EMC22L-12UF	22	36	32	31.9	33	15.0	16.5	1 1/16-20 UN-2A
	EMC22L-16UF	22	36	41	38.2	34	15.0	17.5	1 5/16-12 UN-2A
	EMC28L-12UF	28	41	41	31.9	34	15.0	17.5	1 1/16-12 UN-2A
	EMC28L-16UF	28	41	41	38.2	34	15.0	17.5	1 5/16-12 UN-2A
	EMC35L-16UF	35	50	46	38.2	39	15.0	17.5	1 5/16-22 UN-2A
	EMC35L-20UF	35	50	50	47.7	39	15.0	17.5	1 5/8-12 UN-2A
	EMC42L-20UF	42	60	55	47.7	42	15.0	19.0	1 5/8-12 UN-2A
S PN 630	EMC08S-4UF	8	19	17	16	30	9.0	15.0	7/16-20 UNF-2A
	EMC10S-6UF	10	22	19	17.6	31	10.0	14.5	9/16-18 UNF-2A
	EMC12S-6UF	12	24	22	17.6	31	10.0	14.5	9/16-18 UNF-2A
	EMC12S-8UF	12	24	24	22.3	34	11.0	17.5	3/4/2016 UNF-2A
PN 400	EMC16S-8UF	16	30	24	22.3	34	11.0	15.5	3/4/2016 UNF-2A
	EMC16S-10UF	16	30	27	25.5	37	12.7	18.8	7/8/2014 UNF-2A
	EMC20S-8UF	20	36	32	22.3	42	11.0	20.5	3/4/2016 UNF-2A
	EMC20S-10UF	20	36	32	25.5	42	12.7	20.8	7/8/2014 UNF-2A
	EMC20S-12UF	20	36	32	31.9	42	15.0	20.5	1 1/16-20 UN-2A
	EMC25S-12UF	25	46	36	31.9	47	15.0	23.0	1 1/16-20 UN-2A
	EMC25S-16UF	25	46	41	38.2	47	15.0	23.0	1 5/16-12 UN-2A
	EMC30S-16UF	30	50	46	38.2	50	15.0	23.5	1 5/16-12 UN-2A
	EMC30S-20UF	30	50	50	47.7	50	15.0	23.5	1 5/8-12 UN-2A
PN 315	EMC38S-20UF	38	60	55	47.7	57	15.0	26.0	1 5/8-12 UN-2A

Male Connector (Metric Parallel) with O-Ring

EMC-MF

Connects Tube to Female Port

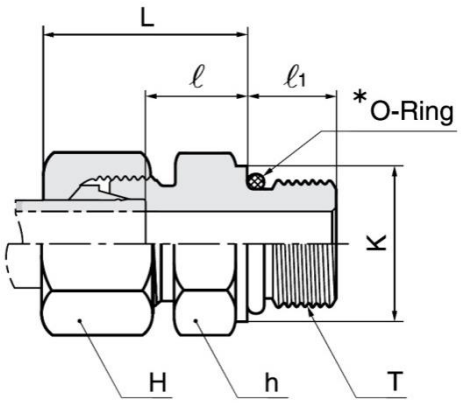

From F stud end

Series	Part No.	Tube O.D.	H	h	K	L	ℓ1	ℓ	T M (Metric)
L PN 315	EMC06L-10MF	6	14	14	-	23	10.0	8.5	M10X1.0
	EMC08L-12MF	8	17	17	-	25	11.5	10.0	M12x1.5
	EMC10L-14MF	10	19	19	-	26	11.5	11.0	M14x1.5
	EMC12L-16MF	12	22	22	-	27	13.0	12.0	M16x1.5
	EMC15L-18MF	15	27	24	-	29	14.5	13.5	M18x1.5
	EMC18L-22MF	18	32	27	-	30	15.5	14.0	M22x1.5
PN 160	EMC22L-26MF	22	36	32	-	32	16.0	16.0	M26x1.5
	EMC28L-33MF	28	41	41	38	34	19.0	17.5	M33x2.0
	EMC35L-42MF	35	50	50	48	39	19.5	17.5	M42x2.0
S PN 630	EMC06S-12MF	6	17	17	-	27	11.5	12.0	M12x1.5
	EMC08S-14MF	8	19	19	-	27	11.5	12.0	M14x1.5
	EMC10S-16MF	10	22	22	-	29	13.0	12.5	M16x1.5
	EMC12S-18MF	12	24	24	-	29	14.5	13.0	M18x1.5
PN 400	EMC16S-22MF	18	30	27	-	33	15.5	15.0	M22x1.5
	EMC20S-27MF	20	36	32	-	37	19.0	15.0	M27x2.0
	EMC25S-33MF	25	46	41	38	41	19.0	17.0	M33x2.0
	EMC30S-42MF	30	50	50	48	45	19.5	18.5	M42x2.0

Female Connector (BSPP)

EFC-G

Connects Tube to Male Port

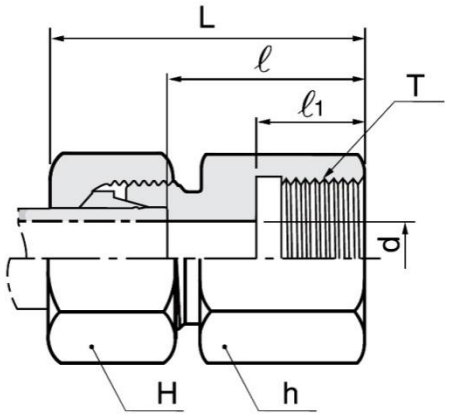

From Y Tapped Hole

Series	Part No.	Tube O.D.	d	H	h	L	ℓ	ℓ1	T G(PF)
L PN 315	EFC06L-01G	6	4	14	14	34	19.0	12.0	1/8"
	EFC08L-02G	8	6	17	19	39	24.0	17.0	1/4"
	EFC08L-03G	8	6	17	24	40	25.0	17.0	3/8"
	EFC08L-04G	8	6	17	27	44	29.0	20.0	1/2"
	EFC10L-02G	10	8	19	19	40	25.0	17.0	1/4"
	EFC10L-03G	10	8	19	24	41	26.0	17.0	3/8"
	EFC10L-04G	10	8	19	27	45	30.0	20.0	1/2"
	EFC12L-03G	12	10	22	24	41	26.0	17.0	3/8"
	EFC12L-04G	12	10	22	27	45	30.0	20.0	1/2"
	EFC15L-04G	15	12	27	27	46	31.0	20.0	1/2"
	EFC18L-04G	18	15	32	27	47	30.5	20.0	1/2"
PN 160	EFC22L-06G	22	19	36	36	52	35.5	22.0	3/4"
	EFC28L-08G	28	24	41	41	55	38.0	24.5	1"
	EFC35L-10G	35	30	50	55	63	41.0	26.5	1 1/4"
	EFC42L-12G	42	36	60	60	65	42.5	28.5	1 1/2"
S PN 630	EFC06S-02G	6	4	17	19	41	26.0	17.0	1/4"
	EFC08S-02G	8	5	19	19	41	26.0	17.0	1/4"
	EFC10S-03G	10	7	22	24	43	26.5	17.0	3/8"
	EFC12S-03G	12	8	24	24	43	26.5	17.0	3/8"
	EFC14S-04G	14	10	27	30	50	32.0	20.0	1/2"
PN 400	EFC GS-04G	16	12	30	30	50	31.5	20.0	1/2"
	EFC20S-06G	20	16	36	36	56	34.5	22.0	3/4"
	EFC25S-08G	25	20	46	41	62	37.5	24.5	1"
	EFC30S-10G	30	25	50	55	69	42.0	26.5	1 1/4"
PN 315	EFC38S-12G	38	32	60	60	74	43.5	28.5	1 1/2"

Female Connector (Metric Parallel)

EFC-M

Connects Tube to Male Port

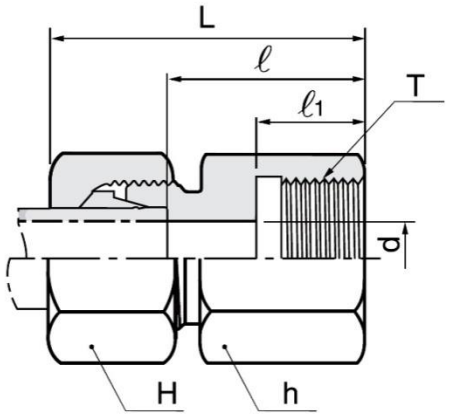

From Y Tapped Hole

Series	Part No.	Tube O.D.	d	H	h	L	ℓ	ℓ1	T M(Metric)
L PN 315	EFC06L-10M	6	4	14	14	34	19.5	12.5	M10 x 1.0
	EFC08L-12M	8	6	17	17	39	24.0	17.0	M12 x 1.5
	EFC10L-14M	10	8	19	19	40	25.0	17.0	M14 x 1.5
	EFC12L-16M	12	10	22	22	41	26.0	17.0	M16 x 1.5
	EFC15L-18M	15	12	27	24	43	28.0	17.0	M18 x 1.5
	EFC18L-22M	18	15	32	30	46	29.5	19.0	M22 x 1.5
PN 160	EFC22L-26M	22	19	36	32	51	34.5	21.0	M26 x 1.5
	EFC28L-33M	28	24	41	41	54	37.5	24.0	M33 x 2.0
	EFC35L-42M	35	30	50	55	62	40.5	26.0	M42 x 2.0
	EFC42L-48M	42	36	60	60	65	42.0	28.0	M48 x 2.0
S PN 630	EFC06S-12M	6	4	17	17	41	26.0	17.0	M12 x 1.5
	EFC08S-14M	8	5	19	19	41	26.0	17.0	M14 x 1.5
	EFC10S-16M	10	7	22	22	43	26.5	17.0	M16 x 1.5
	EFC12S-18M	12	8	24	24	44	27.5	17.0	M18 x 1.5
	EFC14S-20M	14	10	27	27	49	31.0	19.0	M20 x 1.5
PN 400	EFC16S-22M	16	12	30	30	49	30.5	19.0	M22 x 1.5
	EFC20S-27M	20	16	36	36	56	34.5	22.0	M27 x 1.5
	EFC25S-33M	25	20	46	41	61	37.0	24.0	M33 x 2.0
	EFC30S-42M	30	25	50	55	68	41.5	26.0	M42 x 2.0
PN 315	EFC38S-48M	38	32	60	60	74	43.0	28.0	M48 x 2.0

Female Connector (NPT)

EFC-N

Connects Tube to Male Port

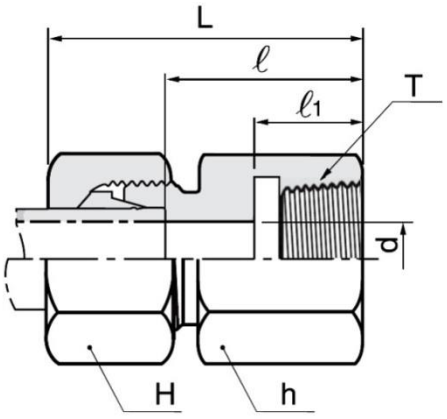

From Y Tapped Hole

Series	Part No.	Tube O.D.	d	H	h	L	ℓ	ℓ1	T N(NPT)
L PN 315	EFC06L-01N	6	4	14	14	34	19.0	11.6	1/8"
	EFC06L-02N	6	4	14	19	38	23.5	16.4	1/4"
	EFC08L-02N	8	6	17	19	38	23.5	16.4	1/4"
	EFC10L-02N	10	8	19	19	39	24.0	16.4	1/4"
	EFC12L-03N	12	10	22	24	42	27.0	17.4	3/8"
	EFC12L-04N	12	10	22	27	47	32.0	22.6	1/2"
	EFC15L-04N	15	12	27	27	48	33.0	22.6	1/2"
	EFC18L-04N	18	15	32	27	49	32.5	22.6	1/2"
PN 160	EFC22L-06N	22	19	36	36	52	35.5	23.1	3/4"
	EFC28L-08N	28	24	41	41	57	40.5	27.8	1"
	EFC35L-10N	35	30	50	55	62	40.5	28.3	1 1/4"
	EFC42L-12N	42	36	60	60	65	42.0	28.3	1 1/2"
S PN 630	EFC06S-01N	6	4	17	14	36	22.0	11.6	1/8"
	EFC06S-02N	6	4	17	19	41	26.0	16.4	1/4"
	EFC08S-02N	8	5	19	19	41	26.0	16.4	1/4"
	EFC10S-03N	10	7	22	24	44	27.0	17.4	3/8"
	EFC12S-02N	12	8	24	22	41	25.0	16.4	1/4"
	EFC12S-03N	12	8	24	24	44	27.5	17.4	3/8"
	EFC12S-04N	12	8	24	27	50	33.5	22.6	1/2"
	EFC14S-04N	14	10	27	27	53	35.0	22.6	1/2"
PN 400	EFC16S-04N	16	12	30	27	50	34.5	22.6	1/2"
	EFC20S-04N	20	16	36	32	55	33.5	22.6	1/2"
	EFC20S-06N	20	16	36	36	57	35.5	23.1	3/4"
	EFC25S-08N	25	20	46	41	65	41.0	27.8	1"
	EFC30S-10N	30	25	50	55	70	43.5	28.3	1 1/4"
PN 315	EFC38S-12N	38	32	60	60	74	43.0	28.3	1 1/2"

Female Connector (BSPP Parallel) with DKI Ring

EFC-GG

Connects Tube to Pressure Gauge

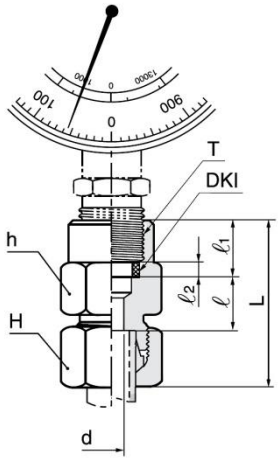

Series	Part No.	Tube O.D.	D1	H	h	L	ℓ	ℓ1	ℓ2	T G(PF)
L PN 315	EFC06L-02GG	6	2.5	14	19	37	7.5	14.5	4.5	1/4"
	EFC08L-02GG	8	5.5	17	19	37	7.5	14.5	4.5	1/4"
	EFC10L-02GG	10	5.5	19	19	38	8.5	14.5	4.5	1/4"
	EFC12L-02GG	12	5.5	22	19	38	8.5	14.5	4.5	1/4"
S PN 630	EFC06S-04GG	6	3.5	17	27	46	11.0	20.0	5.0	1/2"
	EFC08S-04GG	8	3.5	19	27	46	11.0	20.0	5.0	1/2"
	EFC10S-04GG	10	7.0	22	27	47	10.5	20.0	5.0	1/2"
	EFC12S-04GG	12	7.0	24	27	47	10.5	20.0	5.0	1/2"

Standpipe Female Connector (BSPP Parallel) with DKI-Ring

EGA-GG

Connects Tube Port to Pressure Gauge

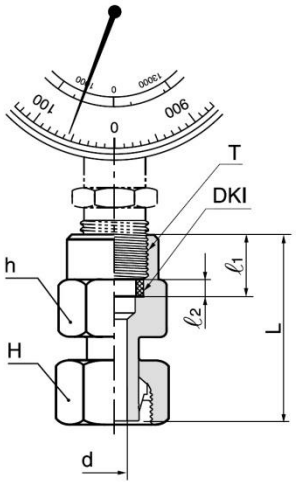

Series	Part No.	Tube O.D.	D1	H	h	L	ℓ1	ℓ2	T G(PF)
L PN 315	EGA06L-02GG	6	3.5	14	19	38.0	14.5	4.5	1/4"
	EGA08L-02GG	8	5.5	17	19	38.0	14.5	4.5	1/4"
	EGA10L-02GG	10	7.5	19	19	39.5	14.5	4.5	1/4"
	EGA12L-02GG	12	9.0	22	19	40.5	14.5	4.5	1/4"
S PN 630	EGA06S-04GG	6	3.5	17	27	45.0	20.0	5.0	1/2"
	EGA08S-04GG	8	4.5	19	27	45.0	20.0	5.0	1/.2
	EGA10S-04GG	10	6.5	22	27	47.0	20.0	5.0	1/2"
	EGA12S-04GG	12	7.5	24	27	47.5	20.0	5.0	1/2"

Swivel Female Connector (BSPP Parallel) with DKI-Ring

EGE-GG

Connects Tube Port to Pressure Gauge

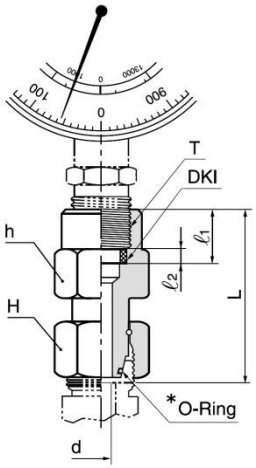

Series	Part No.	Tube O.D.	D1	H	h	L	ℓ1	ℓ2	T G(PF)
L PN 315	EGE06L-02GG	6	2.5	14	19	35.5	14.5	4.5	1/4"
	EGE08L-02GG	8	4.0	17	19	35.5	14.5	4.5	1/4"
	EGE10L-02GG	10	5.5	19	19	36.0	14.5	4.5	1/4"
	EGE12L-02GG	12	5.5	22	19	36.0	14.5	4.5	1/4"
S PN 630	EGE06S-02GG	6	2.5	17	19	35.5	14.5	4.5	1/4"
	EGE08S-02GG	8	4.0	19	19	35.5	14.5	4.5	1/4"
	EGE10S-02GG	10	6.0	22	19	36.0	14.5	4.5	1/4"
	EGE12S-02GG	12	7.0	24	19	39.0	14.5	4.5	1/4"
	EGE06S-04GG	6	2.5	17	27	42.5	20.0	5.0	1/2"
	EGE08S-04GG	8	4.0	19	27	43.0	20.0	5.0	1/2"
	EGE10S-04GG	10	6.0	22	27	43.5	20.0	5.0	1/2"
	EGE12S-04GG	12	7.0	24	27	45.0	20.0	5.0	1/2"

Sealing-Ring

DKI

for EFC/EGA/EGE-GG

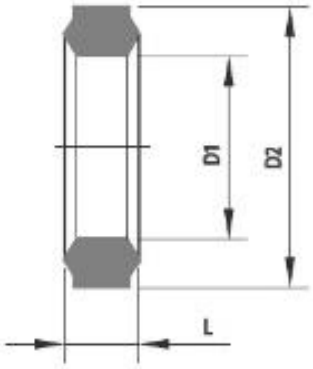

Part No.	Internal Thread	D1	D2	L1
EKI-02G	PF 1/4	6	11.3	4.5
EKI-04G	PF 1/2	12	18.5	5.0

Weld Connector

EAS

Connects Tube to Weld En

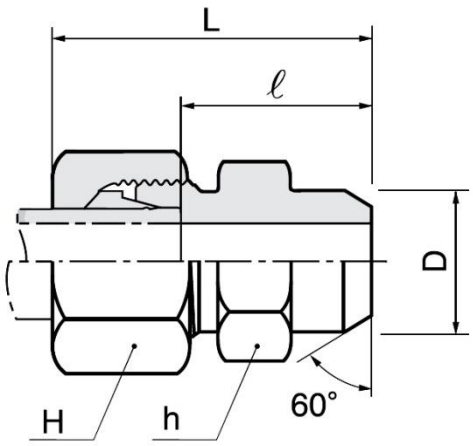

Series	Part No.	Tube O.D.	D	H	h	L	ℓ	PN, bar	
								C	SS
L	EAS-06L	6	10	14	12	29	14.0	315	315
	EAS-08L	8	12	17	14	31	16.0	315	315
	EAS-10L	10	14	19	17	33	18.0	315	315
	EAS-12L	12	16	22	19	33	18.0	315	315
	EAS-15L	15	19	27	22	37	22.0	315	315
	EAS-18L	18	22	32	27	40	23.5	315	315
	EAS-22L	22	27	36	32	45	28.5	160	160
	EAS-28L	28	32	41	41	47	30.5	160	160
	EAS-35L	35	40	50	46	54	32.5	160	160
	EAS-42L	42	46	60	55	58	35.0	160	160
S	EAS-06S	6	11	17	14	34	19.0	630	630
	EAS-08S	8	13	19	17	36	21.0	630	630
	EAS-10S	10	15	22	19	39	22.5	630	630
	EAS-12S	12	17	24	22	41	24.5	630	630
	EAS-14S	14	19	27	24	45	27.0	630	630
	EAS-16S	16	21	30	27	45	26.5	400	400
	EAS-20S	20	26	36	32	51	29.5	400	400
	EAS-25S	25	31	46	41	56	32.0	400	400
	EAS-30S	30	36	50	46	62	35.5	400	400
	EAS-38S	38	44	60	55	69	38.0	315	315

Weld Nipple with O-Ring

EAK

Connects Weld End to Tube Port

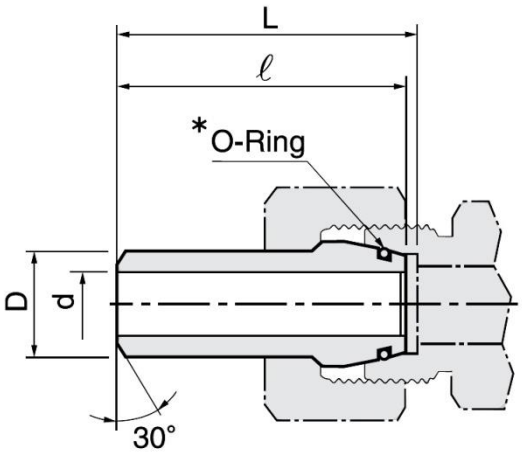

Series	Part No.	Tube O.D.	d	L	ℓ	PN, bar	
		D				C	SS
L/S	EAK10-1.0	10	8	35.5	33.0	249	242
	EAK10-1.5	10	7	35.5	33.0	358	349
	EAK10-2.0	10	6	35.5	33.0	460	447
	EAK12-1.5	12	9	35.5	33.0	305	297
	EAK12-2.0	12	8	35.5	33.0	393	383
	EAK12-2.5	12	7	35.5	33.0	476	463
S	EAK16-1.5	16	13	42.5	39.0	234	228
	EAK16-2.0	16	12	42.5	39.0	305	297
	EAK16-2.5	16	11	42.5	39.0	372	362
	EAK16-3.0	16	10	42.5	39.0	400	400
	EAK20-2.0	20	16	47.5	43.5	249	242
	EAK20-2.5	20	15	47.5	43.5	305	297
	EAK20-3.0	20	14	47.5	43.5	358	349
	EAK20-4.0	20	12	47.5	43.5	400	400
	EAK25-3.0	25	19	55.0	49.5	294	286
	EAK25-4.0	25	17	55.0	49.5	379	369
	EAK25-5.0	25	15	55.0	49.5	400	400
	EAK30-3.0	30	24	58.5	51.5	249	242
	EAK30-4.0	30	22	58.5	51.5	323	314
	EAK30-5.0	30	20	58.5	51.5	393	383
	EAK30-6.0	30	18	58.5	51.5	400	400
	EAK38-4.0	38	30	66.0	56.5	261	254
	EAK38-5.0	38	28	66.0	56.5	315	315
	EAK38-6.0	38	26	66.0	56.5	315	315
	EAK38-7.0	38	24	66.0	56.5	315	315

Weld Connector with EAK

EASK

Connects Weld Ends

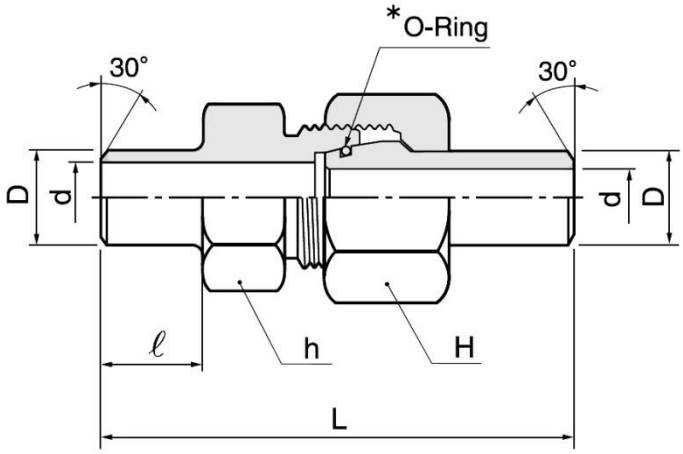

Series	Part No.	Tube O.D.	d	H	h	L	ℓ	PN, bar	
		D						C	SS
S	EASK10-1.0	10	8	22	19	58.0	10.0	249	242
	EASK10-1.5	10	7	22	19	58.0	10.0	358	349
	EASK10-2.0	10	6	22	19	58.0	10.0	460	447
	EASK12-1.5	12	9	24	22	65.0	15.0	305	297
	EASK12-2.0	12	8	24	22	65.0	15.0	393	383
	EASK12-2.5	12	7	24	22	65.0	15.0	476	463
	EASK16-1.5	16	13	30	27	74.5	16.5	234	228
	EASK16-2.0	16	12	30	27	74.5	16.5	305	297
	EASK16-2.5	16	11	30	27	74.5	16.5	372	362
	EASK16-3.0	16	10	30	27	74.5	16.5	400	400
	EASK20-2.0	20	16	36	32	84.0	19.0	249	242
	EASK20-2.5	20	15	36	32	84.0	19.0	305	297
	EASK20-3.0	20	14	36	32	84.0	19.0	358	349
	EASK20-4.0	20	12	36	32	84.0	19.0	400	400
	EASK25-3.0	25	19	46	41	94.5	19.5	294	286
	EASK25-4.0	25	17	46	41	94.5	19.5	379	369
	EASK25-5.0	25	15	46	41	94.5	19.5	400	400
	EASK30-3.0	30	24	50	46	102.0	23.0	249	242
	EASK30-4.0	30	22	50	46	102.0	23.0	323	314
	EASK30-5.0	30	20	50	46	102.0	23.0	393	383
	EASK30-6.0	30	18	50	46	102.0	23.0	400	400
	EASK38-4.0	38	30	60	55	111.0	23.0	261	254
	EASK38-5.0	38	28	60	55	111.0	23.0	315	311
	EASK38-6.0	38	26	60	55	111.0	23.0	315	315
	EASK38-7.0	38	24	60	55	111.0	23.0	315	315

Reducing Weld Nipple with O-Ring

EAKR

Connects Tube Port to Weld End

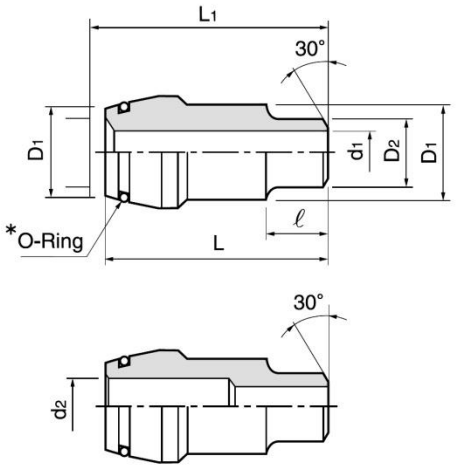

Series	Part No.	Tube O.D.		d1	L2	L1	L	ℓ	PN, bar	
		D1	D2						C	SS
L/S	EAKR1006-1.5	10	6	3	5	37.5	35.0	12	528	539
	EAKR1008-2.0	10	8	4	-	37.5	35.0	12	528	539
	EAKR1208-2.0	12	8	4	6	37.5	35.0	14	528	539
	EAKR1210-1.5	12	10	7	-	37.5	35.0	14	358	349
S	EAKR1612-2.5	16	12	7	-	46.5	43.0	15	400	400
	EAKR2012-2.5	20	12	7	-	51.5	47.5	15	400	400
	EAKR2016-3.0	20	16	10	-	53.5	49.5	17	400	400
	EAKR2516-3.0	25	16	10	-	56.5	51.0	17	400	400
	EAKR2520-4.0	25	20	12	-	59.5	54.0	20	400	400
	EAKR3016-2.0	30	16	12	-	67.0	60.0	17	305	297
	EAKR3020-2.5	30	20	15	-	70.0	63.0	20	305	297
	EAKR3025-3.0	30	25	19	-	70.0	63.0	20	294	286
	EAKR3816-2.0	38	16	12	-	79.0	69.5	17	305	297
	EAKR3820-2.5	38	20	15	-	82.0	72.5	20	305	297
	EAKR3825-3.0	38	25	19	-	82.0	72.5	20	294	286
	EAKR3830-4.0	38	30	22	-	82.0	72.5	20	315	315

Adjustable Standpipe Elbow

ELA

Connects Tube to Tube Port

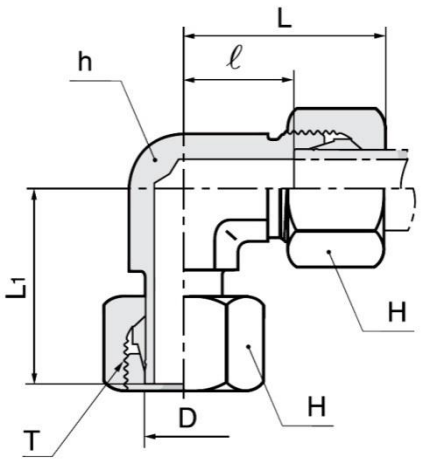

Series	Part No.	Tube O.D.	D	H	h	L	L1	ℓ	T
L PN 315	ELA-06L	6	6	14	12	27	26.0	12.0	M12 x 1.5
	ELA-08L	8	8	17	12	29	27.5	14.0	M14 x 1.5
	ELA-10L	10	10	19	14	30	29.0	15.0	M16 x 1.5
	ELA-12L	12	12	22	17	32	29.5	17.0	M18 x 1.5
	ELA-15L	15	15	27	19	36	32.5	21.0	M22 x 1.5
	ELA-18L	18	18	32	24	40	35.5	23.5	M26 x 1.5
PN 160	ELA-22L	22	22	36	27	44	38.5	27.5	M30 x 2.0
	ELA-28L	28	28	41	36	47	41.5	30.5	M36 x 2.0
	ELA-35L	35	35	50	41	56	51.0	34.5	M45 x 2.0
	ELA-42L	42	42	60	50	63	56.0	40.0	M52 x 2.0
S PN 630	ELA-06S	6	6	17	12	31	27.0	16.0	M14 x 1.5
	ELA-08S	8	8	19	14	32	27.5	17.0	M16 x 1.5
	ELA-10S	10	10	22	17	34	30.0	17.5	M18 x 1.5
	ELA-12S	12	12	24	17	38	31.0	21.5	M20 x 1.5
	ELA-14S	14	14	27	19	40	35.0	22.0	M22 x 1.5
PN 400	ELA-16S	16	16	30	24	43	36.5	24.5	M24 x 1.5
	ELA-20S	20	20	36	27	48	44.5	26.5	M30 x 2.0
	ELA-25S	25	25	46	36	54	50.0	30.0	M36 x 2.0
	ELA-30S	30	30	50	41	62	55.0	35.5	M42 x 2.0
PN 315	ELA-38S	38	38	60	50	72	63.0	41.0	M52 x 2.0

Adjustable Standpipe Branch Tee

EBTA

Connects Tubes to Tube Port

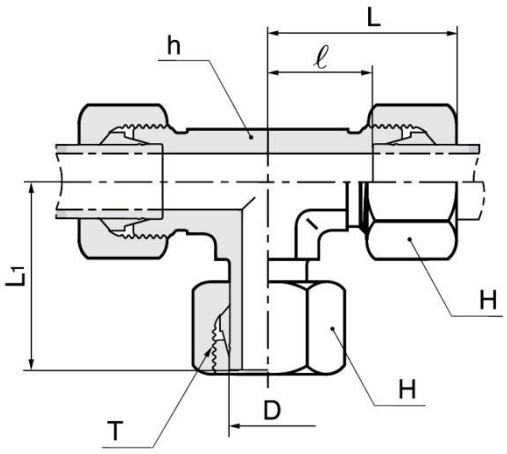

Series	Part No.	Tube O.D.	D	H	h	L	L1	ℓ	T
L PN 315	EBTA-06L	6	6	14	12	27	26.0	12.0	M12 x 1.5
	EBTA-08L	8	8	17	12	29	27.5	14.0	M14 x 1.5
	EBTA-10L	10	10	19	14	30	29.0	15.0	M16 x 1.5
	EBTA-12L	12	12	22	17	32	29.5	17.0	M18 x 1.5
	EBTA-15L	15	15	27	19	36	32.5	21.0	M22 x 1.5
	EBTA-18L	18	18	32	24	40	35.5	23.5	M26 x 1.5
PN 160	EBTA-22L	22	22	36	27	44	38.5	27.5	M30 x 2.0
	EBTA-28L	28	28	41	36	47	41.5	30.5	M36 x 2.0
	EBTA-35L	35	35	50	41	56	51.0	34.5	M45 x 2.0
	EBTA-42L	42	42	60	50	63	56.0	40.0	M52 x 2.0
S PN 630	EBTA-06S	6	6	17	12	31	27.0	16.0	M14 x 1.5
	EBTA-08S	8	8	19	14	32	27.5	17.0	M16 x 1.5
	EBTA-10S	10	10	22	17	34	30.0	17.5	M18 x 1.5
	EBTA-12S	12	12	24	17	38	31.0	21.5	M20 x 1.5
	EBTA-14S	14	14	27	19	40	35.0	22.0	M22 x 1.5
PN 400	EBTA-16S	16	16	30	24	43	36.5	24.5	M24 x 1.5
	EBTA-20S	20	20	36	27	48	44.5	26.5	M30 x 2.0
	EBTA-25S	25	25	46	36	54	50.0	30.0	M36 x 2.0
	EBTA-30S	30	30	50	41	62	55.0	35.5	M42 x 2.0
PN 315	EBTA-38S	38	38	60	50	72	63.0	41.0	M52 x 2.0

Adjustable Standpipe Run Tee

ERTA

Connects Tubes to Tube Port

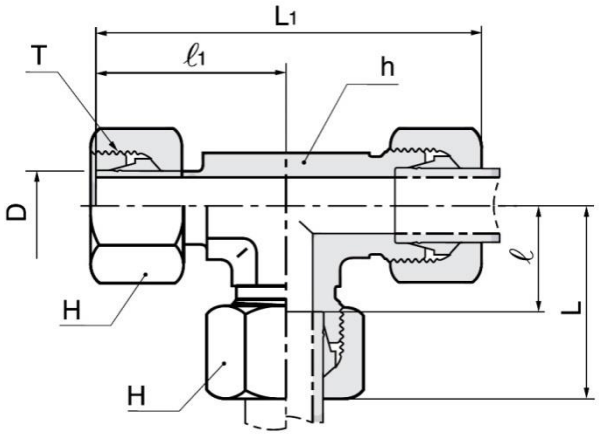

Series	Part No.	Tube O.D.	D	h	H	L	L1	ℓ	ℓ1	T
L PN 315	ERTA-06L	6	6	12	14	27	53	12.0	26.0	M12 x 1.5
	ERTA-08L	8	8	12	17	29	56	14.0	27.5	M14 x 1.5
	ERTA-10L	10	10	14	19	30	59	15.0	29.0	M16 x 1.5
	ERTA-12L	12	12	17	22	32	62	17.0	29.5	M18 x 1.5
	ERTA-15L	15	15	19	27	36	69	21.0	32.5	M22 x 1.5
	ERTA-18L	18	18	24	32	40	75	23.5	35.5	M26 x 1.5
PN 160	ERTA-22L	22	22	27	36	44	83	27.5	38.5	M30 x 2.0
	ERTA-28L	28	28	36	41	47	91	30.5	41.5	M36 x 2.0
	ERTA-35L	35	35	41	50	56	111	34.5	51.0	M45 x 2.0
	ERTA-42L	42	42	50	60	63	123	40.0	56.0	M52 x 2.0
S PN 630	ERTA-06S	6	6	12	17	31	58	16.0	27.0	M14 x 1.5
	ERTA-08S	8	8	14	19	32	61	17.0	27.5	M16 x 1.5
	ERTA-10S	10	10	17	22	34	66	17.5	30.0	M18 x 1.5
	ERTA-12S	12	12	17	24	38	71	21.5	31.0	M20 x 1.5
	ERTA-14S	14	14	19	27	40	75	22.0	35.0	M22 x 1.5
PN 400	ERTA-16S	16	16	24	30	43	79	24.5	36.5	M24 x 1.5
	ERTA-20S	20	20	27	36	48	93	26.5	44.5	M30 x 2.0
	ERTA-25S	25	25	36	46	54	105	30.0	50.0	M36 x 2.0
	ERTA-30S	30	30	41	50	62	119	35.5	55.0	M42 x 2.0
PN 315	ERTA-38S	38	38	50	60	72	138	41.0	63.0	M52 x 2.0

Reducer

ER

Connects Tube to Tube Port

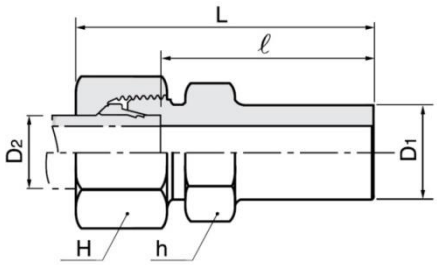

L Series

PN	Part No.	Tube O.D.		H	h	L	ℓ
		D1	D2				
PN315	ER08-06L	8	6	14	12	40	25.5
	ER10L-06L	10	6	14	12	42	27.5
	ER10L-08L		8	17	14	43	27.5
	ER12L-06L	12	6	14	14	42	27.5
	ER12L-08L		8	17	14	43	27.5
	ER12L-10L		10	19	17	44	28.5
	ER15L-06L	15	6	14	19	44	29.0
	ER15L-08L		8	17	19	44	29.0
	ER15L-10L		10	19	19	45	30.0
	ER15L-12L		12	22	19	45	30.0
	ER18L-06L	18	6	14	19	46	31.0
	ER18L-08L		8	17	19	46	31.0
	ER18L-10L		10	19	19	47	32.0
	ER18L-12L		12	22	19	47	32.0
	ER18L-15L		15	27	22	49	33.0
PN160	ER22L-06L	22	6	14	24	48	33.0
	ER22L-08L		8	17	24	48	33.0
	ER22L-10L		10	19	24	49	34.0
	ER22L-12L		12	22	24	49	34.0
	ER22L-15L		15	27	24	50	35.0
	ER22L-18L		18	32	27	51	34.5
	ER28L-06L	28	6	14	30	48	33.0
	ER28L-08L		8	17	30	48	33.0
	ER28L-10L		10	19	30	49	34.0
	ER28L-12L		12	22	30	49	34.0
	ER28L-15L		15	27	30	50	35.0
	ER28L-18L		18	32	30	51	36.0
	ER28L-22L		22	36	32	53	36.5
	ER35L-06L	35	6	14	36	53	38.5
	ER35L-08L		8	17	36	53	38.5
	ER35L-10L		10	19	36	55	39.5
	ER35L-12L		12	22	36	55	39.5
	ER35L-15L		15	27	36	56	40.5
	ER35L-18L		18	32	36	56	40.0
	ER35L-22L		22	36	36	58	42.0
	ER35L-28L		28	41	36	59	42.0
	ER42L-06L	42	6	14	46	56	41.0
	ER42L-08L		8	17	46	56	41.0
	ER42L-10L		10	19	46	58	42.0
	ER42L-12L		12	22	46	58	42.0
	ER42L-15L		15	27	46	60	43.0
	ER42L-18L		18	32	46	60	42.5
	ER42L-22L		22	36	46	62	44.5
	ER42L-28L		28	41	46	64	44.5
	ER42L-35L		35	50	46	67	43.5

Reducer

ER

Connects Tube to Tube Port

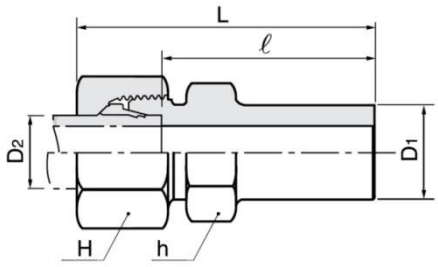

S Series

PN	Part No.	Tube O.D		H	h	L	ℓ
		D1	D2				
PN630	ER08S-06S	8	6	17	14	43	28.0
	ER10S-06S	10	6	17	14	45	30.5
	ER10S-08S		8	19	17	45	30.5
	ER12S-06S	12	6	17	14	47	32.5
	ER12S-08S		8	19	17	47	32.5
	ER12S-10S		10	22	19	48	32.0
	ER14S-06S	14	6	17	17	51	36.5
	ER14S-08S		8	19	17	51	36.5
	ER14S-10S		10	22	19	52	36.0
	ER14S-12S		12	24	22	52	36.0
	ER16S-06S	16	6	17	17	53	38.5
	ER16S-08S		8	19	17	53	38.5
	ER16S-10S		10	22	19	54	38.0
	ER16S-12S		12	24	22	55	38.5
	ER16S-14S		14	27	22	57	39.5
PN400	ER20S-06S	20	6	17	22	58	43.0
	ER20S-08S		8	19	22	58	43.0
	ER20S-10S		10	22	22	59	42.5
	ER20S-12S		12	24	22	59	42.5
	ER20S-14S		14	27	22	62	44.0
	ER20S-16S		16	30	24	62	43.5
	ER25S-06S	25	6	17	27	62	47.5
	ER25S-08S		8	19	27	62	47.5
	ER25S-10S		10	22	27	63	47.0
	ER25S-12S		12	24	27	63	47.0
	ER25S-14S		14	27	27	66	48.5
	ER25S-16S		16	30	27	66	48.0
	ER25S-20S		20	36	30	70	48.0
	ER30S-06S	30	6	17	32	67	52.0
	ER30S-08S		8	19	32	67	52.0
	ER30S-10S		10	22	32	68	51.5
	ER30S-12S		12	24	32	68	51.5
	ER30S-14S		14	27	32	71	53.0
	ER30S-16S		16	30	32	71	52.5
	ER30S-20S		20	36	32	74	52.5
	ER30S-25S		25	46	36	77	53.0
PN 315	ER38S-06S	38	6	17	41	72	57.0
	ER38S-08S		8	19	41	72	57.0
	ER38S-10S		10	22	41	73	56.5
	ER38S-12S		12	24	41	73	56.5
	ER38S-14S		14	27	41	76	58.0
	ER38S-16S		16	30	41	76	57.5
	ER38S-20S		20	36	41	79	57.5
	ER38S-25S		25	46	41	82	58.0
	ER38S-30S		30	50	46	89	58.5

Adjustable Standpipe Reducer

EKOR

Connects Tube to Tube Port

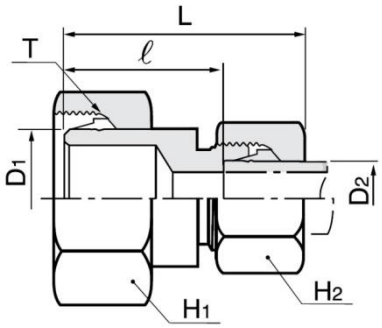

L Series

PN	Part No.	Tube O.D.		H1	H2	L	ℓ	T
		D1	D2					
PN315	EKOR08L-06L	8	6	17	14	38	23.5	M12 x 1.5
	EKOR10L-06L	10	6	19	14	38	23.5	M16 x 1.5
	EKOR10L-08L		8		17	38	23.5	
	EKOR12L-06L	12	6	22	14	38	23.5	M18 x 1.5
	EKOR12L-08L		8		17	38	23.5	
	EKOR12L-10L		10		19	39	24.5	
	EKOR15L-06L	15	6	27	14	38	23.5	M22 x 1.5
	EKOR15L-08L		8		17	38	23.5	
	EKOR15L-10L		10		19	39	24.5	
	EKOR15L-12L		12		22	39	24.5	
	EKOR18L-06L	18	6	32	14	39	24.5	M26 x 1.5
	EKOR18L-08L		8		17	39	24.5	
	EKOR18L-10L		10		19	40	25.5	
	EKOR18L-12L		12		22	40	25.5	
	EKOR18L-15L		15		27	42	26.5	
PN160	EKOR22L-06L	22	6	36	14	40	25.5	M30 x 2.0
	EKOR22L-08L		8		17	40	25.5	
	EKOR22L-10L		10		19	41	26.5	
	EKOR22L-12L		12		22	41	26.5	
	EKOR22L-15L		15		27	43	27.5	
	EKOR22L-18L		18		32	43	27.5	
	EKOR28L-06L	28	6	41	14	41	26.5	M36 x 2.0
	EKOR28L-08L		8		17	41	26.5	
	EKOR28L-10L		10		19	42	27.5	
	EKOR28L-12L		12		22	42	27.5	
	EKOR28L-15L		15		27	44	28.5	
	EKOR28L-18L		18		32	44	28.0	
	EKOR28L-22L		22		36	46	30.0	
	EKOR35L-06L	35	6	50	14	46	31.5	M45 x 2.0
	EKOR35L-08L		8		17	46	31.5	
	EKOR35L-10L		10		19	47	32.5	
	EKOR35L-12L		12		22	47	32.5	
	EKOR35L-15L		15		27	49	33.5	
	EKOR35L-18L		18		32	49	33.0	
	EKOR35L-22L		22		36	51	35.0	
	EKOR35L-28L		28		41	52	35.0	
	EKOR42L-10L	42	10	60	19	48	33.5	M52 x 2.0
	EKOR42L-12L		12		22	48	33.5	
	EKOR42L-15L		15		27	50	34.5	
	EKOR42L-18L		18		32	50	34.0	
	EKOR42L-22L		22		36	52	36.0	
	EKOR42L-28L		28		41	53	36.0	
	EKOR42L-35L		35		50	57	35.0	

Adjustable Standpipe Reducer

EKOR

Connects Tube to Tube Port

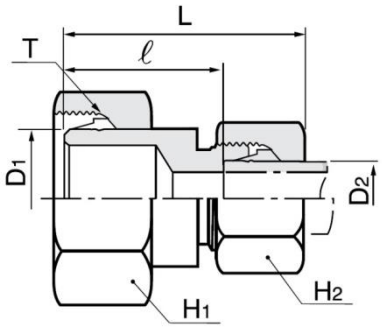

S Series

PN	Part No.	Tube O.D.		H1	H2	L	ℓ	T
		D1	D2					
PN630	EKOR08S-06S	8	6	19	17	40	25.0	M16 x 1.5
	EKOR10S-06S	10	6	22	17	41	26.0	M18 x 1.5
	EKOR10S-08S		8		19	41	26.0	
	EKOR12S-06S	12	6	24	17	42	27.0	M20 x 1.5
	EKOR12S-08S		8		19	42	27.0	
	EKOR12S-10S		10		22	43	26.5	
	EKOR14S-06S	14	6	27	17	44	29.0	M22 x 1.5
	EKOR14S-08S		8		19	44	29.0	
	EKOR14S-10S		10		22	45	28.5	
	EKOR14S-12S		12		24	45	28.5	
PN400	EKOR16S-06S	16	6	30	17	44	29.0	M24 x 1.5
	EKOR16S-08S		8		19	44	29.0	
	EKOR16S-10S		10		22	45	28.5	
	EKOR16S-12S		12		24	45	28.5	
	EKOR16S-14S		14		27	80	30.0	
	EKOR20S-06S	20	6	36	17	49	34.0	M30 x 2.0
	EKOR20S-08S		8		19	49	34.0	
	EKOR20S-10S		10		22	50	33.5	
	EKOR20S-12S		12		24	50	33.5	
	EKOR20S-14S		14		27	53	35.0	
	EKOR20S-16S		16		30	53	34.5	
	EKOR25S-06S	25	6	46	17	52	37.0	M36 x 2.0
	EKOR25S-08S		8		19	52	37.0	
	EKOR25S-10S		10		22	53	36.5	
	EKOR25S-12S		12		24	53	36.5	
	EKOR25S-14S		14		27	55	37.0	
	EKOR25S-16S		16		30	55	36.5	
	EKOR25S-20S		20		36	59	37.5	
	EKOR30S-06S	30	6	50	17	54	39.0	M42 x 2.0
	EKOR30S-08S		8		19	54	39.0	
	EKOR30S-10S		10		22	55	38.5	
	EKOR30S-12S		12		24	55	38.5	
	EKOR30S-14S		14		27	58	40.0	
	EKOR30S-16S		16		30	58	39.5	
	EKOR30S-20S		20		36	61	39.5	
	EKOR30S-25S		25		46	64	40.0	
PN 315	EKOR38S-06S	38	6	60	17	58	43.0	M52 x 2.0
	EKOR38S-08S		8		19	58	43.0	
	EKOR38S-10S		10		22	59	42.5	
	EKOR38S-12S		12		24	59	42.5	
	EKOR38S-14S		14		27	62	44.0	
	EKOR38S-16S		16		30	62	43.5	
	EKOR38S-20S		20		36	65	43.5	
	EKOR38S-25S		25		46	68	44.0	
	EKOR38S-30S		30		50	71	44.5	

Adjustable Standpipe Male Adapter (BSPP)

EA-GE

Connects Tube Port to Female Port

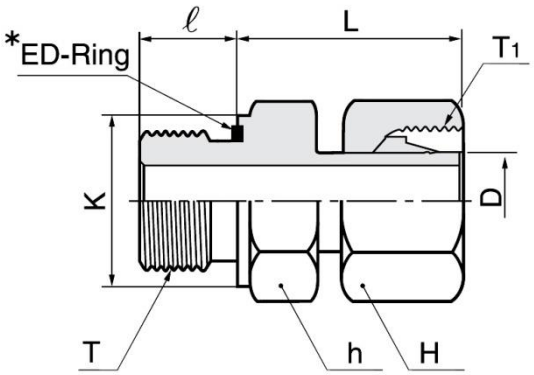

From E stud end

Series	Part No.	Tube O.D. D	H	h	K	L	ℓ	T G(PF)	T1
L PN 315	EA06L-01GE	6	14	14	14	24.5	8	1/8"	M12 x 1.5
	EA08L-02GE	8	17	19	19	29.5	12	1/4"	M14 x 1.5
	EA10L-02GE	10	19	19	19	27.5	12	1/4"	M16 x 1.5
	EA12L-03GE	12	22	22	22	34.0	12	3/8"	M18 x 1.5
	EA15L-04GE	15	27	27	27	32.0	14	1/2"	M22 x 1.5
	EA18L-04GE	18	32	27	27	31.5	14	1/2"	M26 x 1.5
PN 160	EA22L-06GE	22	36	32	32	32.5	16	3/4"	M30 x 2.0
	EA28L-08GE	28	41	41	41	35.0	18	1"	M36 x 2.0
	EA35L-10GE	35	50	50	50	42.5	20	1 1/4"	M45 x 2.0
	EA42L-12GE	42	60	55	55	46.5	22	1 1/2"	M52 x 2.0
S PN 630	EA06S-02GE	6	17	19	19	27.0	12	1/4"	M14 x 1.5
	EA08S-02GE	8	19	19	19	29.5	12	1/4"	M16 x 1.5
	EA10S-03GE	10	22	22	22	32.0	12	3/8"	M18 x 1.5
	EA12S-03GE	12	24	22	22	34.0	12	3/8"	M20 x 1.5
	EA12S-04GE	12	24	27	27	34.5	14	1/2"	M20 x 1.5
	EA14S-04GE	14	27	27	27	36.5	14	1/2"	M22 x 1.5
PN 400	EA16S-04GE	16	30	27	27	37.0	14	1/2"	M24 x 1.5
	EA16S-06GE	16	30	32	32	39.0	16	3/4"	M24 x 1.5
	EA20S-06GE	20	36	32	32	43.0	16	3/4"	M30 x 2.0
	EA25S-08GE	25	46	41	41	48.0	18	1"	M36 x 2.0
	EA30S-10GE	30	50	50	50	51.0	20	1 1/4"	M45 x 2.0
PN 315	EA38S-12GE	38	60	55	55	60.0	22	1 1/2"	M52 x 2.0

Adjustable Standpipe Male Adapter (Metric Parallel)

EA-ME

Connects Tube Port to Female Port

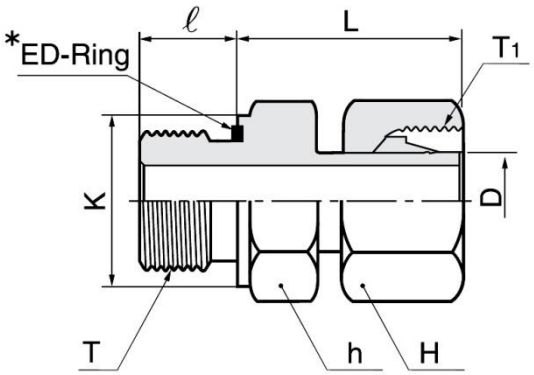

From E stud end

Series	Part No.	Tube O.D. D	H	h	K	L	ℓ	T M(Metric)	T1
L PN 315	EA06L-10ME	6	14	14	14	24.5	8	M10 x 1.0	M12 x 1.5
	EA08L-12ME	8	17	17	17	26.5	12	M12 x 1.5	M14 x 1.5
	EA10L-14ME	10	19	19	19	27.5	12	M14 x 1.5	M16 x 1.5
	EA12L-16ME	12	22	22	22	30.5	12	M16 x 1.5	M18 x 1.5
	EA15L-18ME	15	27	24	24	31.5	14	M18 x 1.5	M22 x 1.5
	EA18L-22ME	18	32	27	27	31.5	14	M22 x 1.5	M26 x 1.5
PN 160	EA22L-26ME	22	36	32	32	32.5	16	M26 x 1.5	M30 x 2.0
	EA28L-33ME	28	41	41	41	35.0	18	M33 x 2.0	M36 x 2.0
	EA35L-42ME	35	50	50	50	42.5	20	M42 x 2.0	M45 x 2.0
	EA42L-48ME	42	60	55	55	46.5	22	M48 x 2.0	M52 x 2.0
S PN 630	EA06S-10ME	6	17	17	17	27.0	12	M12 x 1.5	M14 x 1.5
	EA08S-14ME	8	19	19	19	29.5	12	M14 x 1.5	M16 x 1.5
	EA10S-16ME	10	22	22	22	32.0	12	M16 x 1.5	M18 x 1.5
	EA12S-18ME	12	24	24	24	34.0	12	M18 x 1.5	M20 x 1.5
	EA14S-20ME	14	27	27	27	36.5	14	M20 x 1.5	M22 x 1.5
	EA16S-22ME	16	30	27	27	37.0	14	M22 x 1.5	M24 x 1.5
PN 400	EA20S-27ME	20	36	32	32	43.0	16	M27 x 2.0	M30 x 2.0
	EA25S-33ME	25	46	41	41	48.0	18	M33 x 2.0	M36 x 2.0
	EA30S-42ME	30	50	50	50	51.0	20	M42 x 2.0	M42 x 2.0
	EA38S-48ME	38	60	55	55	60.0	22	M48 x 2.0	M52 x 2.0
	EA30S-10ME	30	50	50	50	51.0	20	1 1/4"	M45 x 2.0
PN 315	EA38S-12ME	38	60	55	55	60.0	22	1 1/2"	M52 x 2.0

Adjustable Swivel Union

EUE

Connects Tube Port

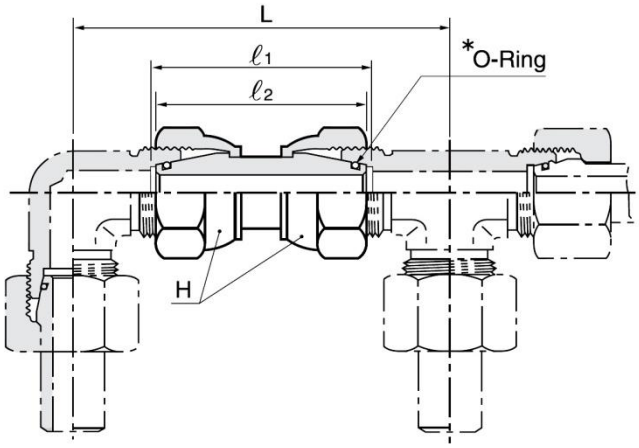

Series	Part No.	Tube O.D	H	L	ℓ	ℓ1	PN, bar	
							C	SS
L	EUE-06L	6	17	64.0	36.0	34.0	500	315
	EUE-08L	8	17	64.0	36.0	34.0	500	315
	EUE-10L	10	19	67.0	37.0	36.0	500	315
	EUE-12L	12	22	71.0	37.0	36.0	400	315
	EUE-15L	15	27	82.0	40.0	39.0	400	315
	EUE-18L	18	32	89.5	42.5	40.5	400	315
	EUE-22L	22	36	102.0	47.0	45.0	250	160
	EUE-28L	28	46	110.0	49.0	47.0	250	160
	EUE-35L	35	50	127.0	58.0	53.0	250	160
	EUE-42L	42	60	139.0	59.0	53.0	250	160
S	EUE-06S	6	17	71.0	39.0	37.0	800	630
	EUE-08S	8	19	73.0	39.0	37.0	800	630
	EUE-10S	10	22	78.0	43.0	41.0	800	630
	EUE-12S	12	24	87.0	44.0	43.0	630	630
	EUE-14S	14	27	92.0	48.0	45.0	630	630
	EUE-16S	16	30	99.0	50.0	46.0	630	400
	EUE-20S	20	36	113.0	60.0	55.0	400	400
	EUE-25S	26	46	126.0	66.0	58.0	400	400
	EUE-30S	30	50	144.0	73.0	62.0	400	400
	EUE-38S	38	60	165.0	83.0	67.0	400	315

Adjustable Swivel Elbow

EEW

Connects Tube to Tube Port

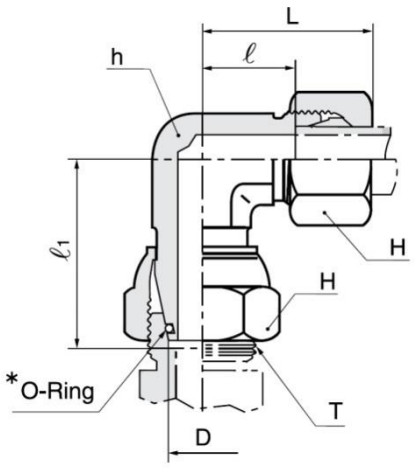

Series	Part No.	Tube O.D.	H	h	L	ℓ	ℓ1	T
L PN 315	EEW-06L	6	14	12	27	12.0	26.0	M12 x 1.5
	EEW-08L	8	17	12	29	14.0	27.5	M14 x 1.5
	EEW-10L	10	19	14	30	15.0	29.0	M16 x 1.5
	EEW-12L	12	22	17	32	17.0	29.5	M18 x 1.5
	EEW-15L	15	27	19	36	21.0	32.5	M22 x 1.5
	EEW-18L	18	32	24	40	23.5	35.5	M26 x 1.5
PN 160	EEW-22L	22	36	27	44	27.5	38.5	M30 x 2.0
	EEW-28L	28	41	36	47	30.5	41.5	M36 x 2.0
	EEW-35L	35	50	41	56	34.5	51.0	M45 x 2.0
	EEW-42L	42	60	50	63	40.0	56.0	M52 x 2.0
S PN 630	EEW-06S	6	17	12	31	16.0	27.0	M14 x 1.5
	EEW-08S	8	19	14	32	17.0	27.5	M16 x 1.5
	EEW-10S	10	22	17	34	17.5	30.0	M18 x 1.5
	EEW-12S	12	24	17	38	21.5	31.0	M20 x 1.5
	EEW-14S	14	27	19	40	22.0	35.0	M22 x 1.5
PN 400	EEW-16S	16	30	24	43	24.5	36.5	M24 x 1.5
	EEW-20S	20	36	27	48	26.5	44.5	M30 x 2.0
	EEW-25S	25	36	36	54	30.0	50.0	M36 x 2.0
	EEW-30S	30	50	41	62	35.5	55.0	M42 x 2.0
PN 315	EEW-38S	38	60	50	72	41.0	63.0	M52 x 2.0

Swivel Branch Tee

EET

Connects Tubes to Tube Port

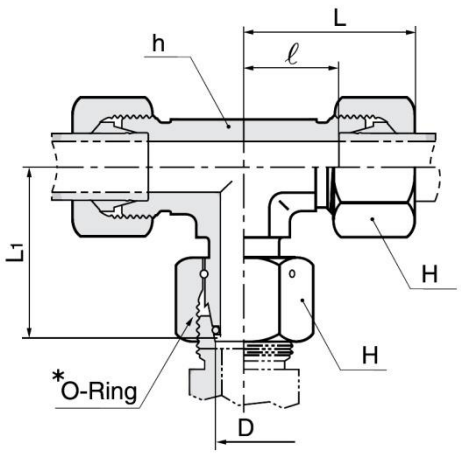

Series	Part No.	Tube O.D. D	H	h	L	L1	ℓ	T
L PN 315	EET-06L	6	14	12	27	26.0	12.0	M12 x 1.5
	EET-08L	8	17	12	29	27.5	14.0	M14 x 1.5
	EET-10L	10	19	14	30	29.0	15.0	M16 x 1.5
	EET-12L	12	22	17	32	29.5	17.0	M18 x 1.5
	EET-15L	15	27	19	36	32.5	21.0	M22 x 1.5
	EET-18L	18	32	24	40	35.5	23.5	M26 x 1.5
PN 160	EET-22L	22	36	27	44	38.5	27.5	M30 x 2.0
	EET-28L	28	41	36	47	41.5	30.5	M36 x 2.0
	EET-35L	35	50	41	56	51.0	34.5	M45 x 2.0
	EET-42L	42	60	50	63	56.0	40.0	M52 x 2.0
S PN 630	EET-06S	6	17	12	31	27.0	16.0	M14 x 1.5
	EET-08S	8	19	14	32	27.5	17.0	M16 x 1.5
	EET-10S	10	22	17	34	30.0	17.5	M18 x 1.5
	EET-12S	12	24	17	38	31.0	21.5	M20 x 1.5
	EET-14S	14	27	19	40	35.0	22.0	M22 x 1.5
PN 400	EET-16S	16	30	24	43	36.5	24.5	M24 x 1.5
	EET-20S	20	36	27	48	44.5	26.5	M30 x 2.0
	EET-25S	25	46	36	54	50.0	30.0	M36 x 2.0
	EET-30S	30	50	41	62	55.0	35.5	M42 x 2.0
PN 315	EET-38S	38	60	50	72	63.0	41.0	M52 x 2.0

Adjustable Swivel Run Tee

EEL

Connects Tubes to Tube Port

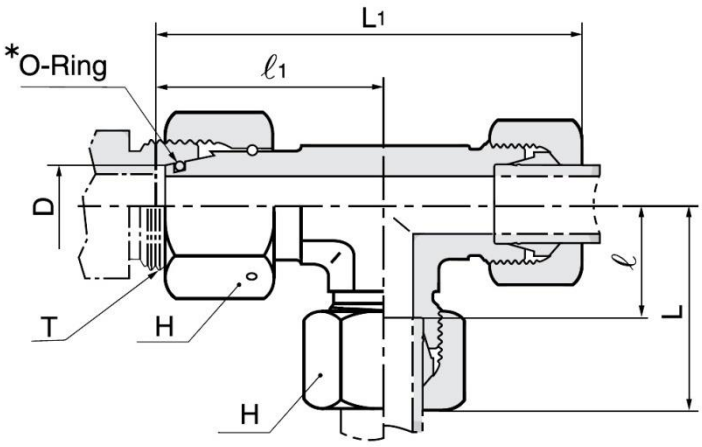

Series	Part No.	Tube O.D. D	H	h	L	L1	ℓ	ℓ1	T
L PN 315	EEL-06L	6	14	12	27	53	12.0	26.0	M12 x 1.5
	EEL-08L	8	17	12	29	56	14.0	27.5	M14 x 1.5
	EEL-10L	10	19	14	30	59	15.0	29.0	M16 x 1.5
	EEL-12L	12	22	17	32	61	17.0	29.5	M18 x 1.5
	EEL-15L	15	27	19	36	69	21.0	32.5	M22 x 1.5
	EEL-18L	18	32	24	40	75	23.5	35.5	M26 x 1.5
PN 160	EEL-22L	22	36	27	44	82	27.5	38.5	M30 x 2.0
	EEL-28L	28	41	36	47	89	30.5	41.5	M36 x 2.0
	EEL-35L	35	50	41	56	107	34.5	51.0	M45 x 2.0
	EEL-42L	42	60	50	63	119	40.0	56.0	M52 x 2.0
S PN 630	EEL-06S	6	17	12	31	58	16.0	27.0	M14 x 1.5
	EEL-08S	8	19	14	32	59	17.0	27.5	M16 x 1.5
	EEL-10S	10	22	17	34	64	17.5	30.0	M18 x 1.5
	EEL-12S	12	24	17	38	69	21.5	31.0	M20 x 1.5
	EEL-14S	14	27	19	40	75	22.0	35.0	M22 x 1.5
PN 400	EEL-16S	16	30	24	43	79	24.5	36.5	M24 x 1.5
	EEL-20S	20	36	27	48	93	26.5	44.5	M30 x 2.0
	EEL-25S	25	46	36	54	104	30.0	50.0	M36 x 2.0
	EEL-30S	30	50	41	62	117	35.5	55.0	M42 x 2.0
PN 315	EEL-38S	38	60	50	72	135	41.0	63.0	M52 x 2.0

Adjustable Swivel Reducer

ERED

Connects Tube to Tube Port

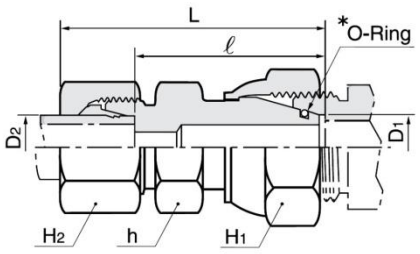

L Series

PN	Part No.	Tube O.D.		H1	H2	h	L	ℓ
		D1	D2					
PN315	ERED08L-06L	8	6	17	14	14	39.0	24.5
	ERED10L-06L	10	6	19	14	17	39.5	24.5
	ERED10L-08L		8		17		39.5	24.5
	ERED12L-06L	12	6	22	14	17	40.0	25.0
	ERED12L-08L		8		17		40.0	25.0
	ERED12L-10L		10		19		41.0	26.0
	ERED15L-06L	15	6	27	14	22	42.0	27.5
	ERED15L-08L		8		17		42.0	27.5
	ERED15L-10L		10		19		43.0	28.5
	ERED15L-12L		12		22		43.0	28.5
	ERED18L-06L	18	6	32	14	25	43.0	28.0
	ERED18L-08L		8		17		43.0	28.0
	ERED18L-10L		10		19		44.5	29.5
	ERED18L-12L		12		22		44.5	29.5
	ERED18L-15L		15		27		45.5	30.5
PN160	ERED22L-06L	22	6	36	14	28.5	47.0	32.0
	ERED22L-08L		8		17		47.0	32.0
	ERED22L-10L		10		19		48.0	33.0
	ERED22L-12L		12		22		48.0	33.0
	ERED22L-15L		15		27		49.0	34.0
	ERED22L-18L		18		32		50.0	33.5
	ERED28L-06L	28	6	41	14	36	49.0	34.0
	ERED28L-08L		8		17		49.0	34.0
	ERED28L-10L		10		19		50.0	35.0
	ERED28L-12L		12		22		50.0	35.0
	ERED28L-15L		15		27		51.0	36.0
	ERED28L-18L		18		32		52.0	35.5
	ERED28L-22L		22		36		54.0	37.5
	ERED35L-06L	35	6	50	14	46	55.0	40.0
	ERED35L-08L		8		17		55.0	40.0
	ERED35L-10L		10		19		56.0	41.0
	ERED35L-12L		12		22		56.0	41.0
	ERED35L-15L		15		27		57.0	42.0
	ERED35L-18L		18		32		58.0	41.5
	ERED35L-22L		22		36		60.0	43.5
	ERED35L-28L		28		41		60.0	43.5
	ERED42L-06L	42	6	60	14	50	55.0	40.5
	ERED42L-08L		8		17		55.0	40.5
	ERED42L-10L		10		19		56.0	41.5
	ERED42L-12L		12		22		56.0	41.5
	ERED42L-15L		15		27		58.0	42.5
	ERED42L-18L		18		32		58.0	42.0
	ERED42L-22L		22		36		60.0	44.0
	ERED42L-28L		28		41		61.0	44.0
	ERED42L-35L		35		50		65.0	43.0

Adjustable Swivel Reducer

ERED

Connects Tube to Tube Port

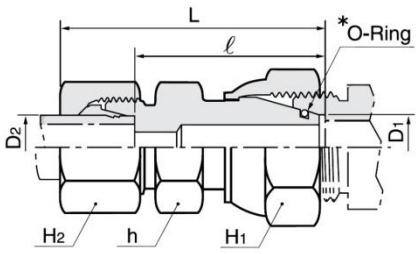

S Series

PN	Part No.	Tube O.D.		H1	H2	h	L	ℓ
		D1	D2					
PN630	ERED08S-06S	8	6	19	17	17	44.0	28.0
	ERED10S-06S	10	6	22	17	17	44.0	29.5
	ERED10S-08S		8		19		44.0	29.5
	ERED12S-06S	12	6	24	17	19	45.0	30.0
	ERED12S-08S		8		19		45.0	30.0
	ERED12S-10S		10		22		46.0	29.5
	ERED14S-06S	14	6	27	17	22	47.5	33.0
	ERED14S-08S		8		19		47.5	33.0
	ERED14S-10S		10		22		48.5	32.5
	ERED14S-12S		12		24		48.5	32.5
	ERED16S-06S	16	6	30	17	24	50.0	35.0
	ERED16S-08S		8		19		50.0	35.0
	ERED16S-10S		10		22		51.0	34.5
	ERED16S-12S		12		24		51.0	34.5
	ERED16S-14S		14		27		54.0	36.0
PN400	ERED20S-06S	20	6	36	17	28.5	54.0	39.0
	ERED20S-08S		8		19		54.0	39.0
	ERED20S-10S		10		22		55.0	38.5
	ERED20S-12S		12		24		55.0	38.5
	ERED20S-14S		14		27		58.0	40.0
	ERED20S-16S		16		30		58.0	39.5
	ERED25S-06S	25	6	46	17	36	58.0	43.5
	ERED25S-08S		8		19		58.0	43.5
	ERED25S-10S		10		22		59.0	43.0
	ERED25S-12S		12		24		59.0	43.0
	ERED25S-14S		14		27		62.0	44.5
	ERED25S-16S		16		30		62.0	44.0
	ERED25S-20S		20		36		66.0	44.0
	ERED30S-06S	30	6	50	17	41	66.0	51.0
	ERED30S-08S		8		19		66.0	51.0
	ERED30S-10S		10		22		67.0	50.5
	ERED30S-12S		12		24		67.0	50.5
	ERED30S-14S		14		27		70.0	52.0
	ERED30S-16S		16		30		70.0	51.5
	ERED30S-20S		20		36		73.0	51.5
	ERED30S-25S		25		46		76.0	52.0
PN315	ERED38S-06S	38	6	60	17	50	70.5	56.0
	ERED38S-08S		8		19		70.5	56.0
	ERED38S-10S		10		22		71.5	55.5
	ERED38S-12S		12		24		71.5	55.5
	ERED38S-14S		14		27		74.5	57.0
	ERED38S-16S		16		30		74.5	56.5
	ERED38S-20S		20		36		78.5	56.5
	ERED38S-25S		25		46		81.5	57.0
	ERED38S-30S		30		50		85.5	58.5

Adjustable Swivel Male Adapter (BSPP)

EEGE-GE

Connects Tube Port to Female Port

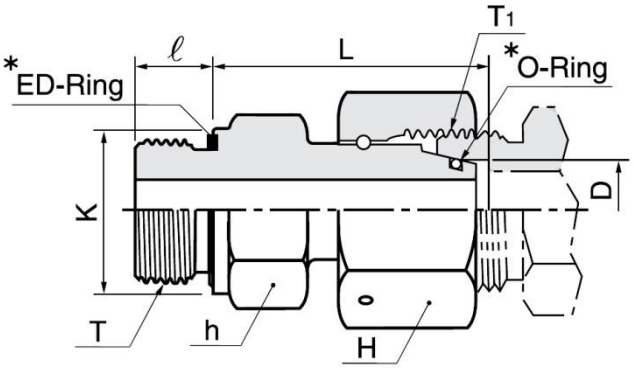

From E stud end

Series	Part No.	Tube O.D. D	H	h	K	L	ℓ	T G(PF)	T1
L PN 315	EEGE06L-01GE	6	14	14	14	24.5	8	1/8"	M12 x 1.5
	EEGE08L-02GE	8	17	19	19	29.5	12	1/4"	M14 x 1.5
	EEGE10L-02GE	10	19	19	19	27.5	12	1/4"	M16 x 1.5
	EEGE12L-03GE	12	22	22	22	34.0	12	3/8"	M18 x 1.5
	EEGE15L-04GE	15	27	27	27	32.0	14	1/2"	M22 x 1.5
	EEGE18L-04GE	18	32	27	27	31.5	14	1/2"	M26 x 1.5
PN 160	EEGE22L-06GE	22	36	32	32	32.5	16	3/4"	M30 x 2.0
	EEGE28L-08GE	28	41	41	41	35.0	18	1"	M36 x 2.0
	EEGE35L-10GE	35	50	50	50	42.5	20	1 1/4"	M45 x 2.0
	EEGE42L-12GE	42	60	55	55	46.5	22	1 1/2"	M52 x 2.0
S PN 630	EEGE06S-02GE	6	17	19	19	27.0	12	1/4"	M14 x 1.5
	EEGE08S-02GE	8	19	19	19	29.5	12	1/4"	M16 x 1.5
	EEGE10S-03GE	10	22	22	22	32.0	12	3/8"	M18 x 1.5
	EEGE12S-03GE	12	24	22	22	34.0	12	3/8"	M20 x 1.5
	EEGE14S-04GE	14	27	27	27	36.5	14	1/2"	M22 x 1.5
PN 400	EEGE16S-04GE	16	30	27	27	37.0	14	1/2"	M24 x 1.5
	EEGE20S-06GE	20	36	32	32	43.0	16	3/4"	M30 x 2.0
	EEGE25S-08GE	25	46	41	41	48.0	18	1"	M36 x 2.0
	EEGE30S-10GE	30	50	50	50	51.0	20	1 1/4"	M42 x 2.0
PN 315	EEGE38S-12GE	38	60	55	55	60.0	22	1 1/2"	M52 x 2.0

Adjustable Swivel Male Adapter (Metric Parallel)

EEGE-ME

Connects Tube Port to Female Port

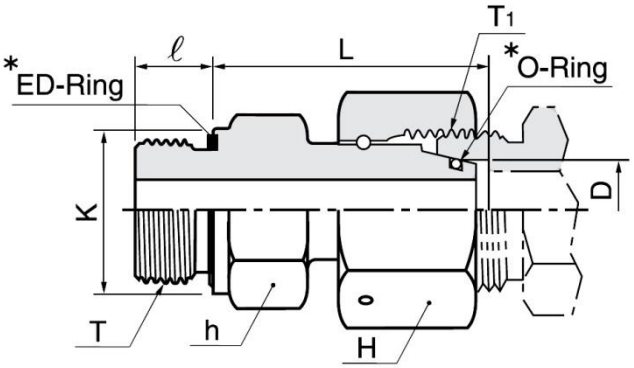

From E stud end

Series	Part No.	Tube O.D. D	H	h	K	L	ℓ	T M(Metric)	T1
L PN 315	EEGE06L-10ME	6	14	14	14	24.5	8	M10 x 1.0	M12 x 1.5
	EEGE08L-12ME	8	17	17	17	26.5	12	M12 x 1.5	M14 x 1.5
	EEGE10L-14ME	10	19	19	19	27.5	12	M14 x 1.5	M16 x 1.5
	EEGE12L-16ME	12	22	22	22	30.5	12	M16 x 1.5	M18 x 1.5
	EEGE15L-18ME	15	27	24	24	31.5	12	M18 x 1.5	M22 x 1.5
	EEGE18L-22ME	18	32	27	27	31.5	14	M22 x 1.5	M26 x 1.5
PN 160	EEGE22L-26ME	22	36	32	32	32.5	16	M26 x 1.5	M30 x 2.0
	EEGE28L-33ME	28	41	41	40	35.0	18	M33 x 2.0	M36 x 2.0
	EEGE35L-42ME	35	50	50	50	42.5	20	M42 x 2.0	M45 x 2.0
	EEGE42L-48ME	42	60	55	55	46.5	22	M48 x 2.0	M52 x 2.0
S PN 630	EEGE06S-12ME	6	17	17	17	27.0	12	M12 x 1.5	M14 x 1.5
	EEGE08S-14ME	8	19	19	19	29.5	12	M14 x 1.5	M16 x 1.5
	EEGE10S-16ME	10	22	22	22	32.0	12	M16 x 1.5	M18 x 1.5
	EEGE12S-18ME	12	24	24	24	34.0	12	M18 x 1.5	M20 x 1.5
	EEGE14S-20ME	14	27	27	26	36.5	14	M20 x 1.5	M22 x 1.5
PN 400	EEGE16S-22ME	16	30	27	27	37.0	14	M22 x 1.5	M24 x 1.5
	EEGE20S-27ME	20	36	32	32	43.0	16	M27 x 2.0	M30 x 2.0
	EEGE25S-33ME	25	46	41	40	48.0	18	M33 x 2.0	M36 x 2.0
	EEGE30S-42ME	30	50	50	50	51.0	20	M42 x 2.0	M42 x 2.0
PN 315	EEGE38S-48ME	38	60	55	55	60.0	22	M48 x 2.0	M52 x 2.0

Blanking Plugs with ED-Ring

EVSTI-GE/ME

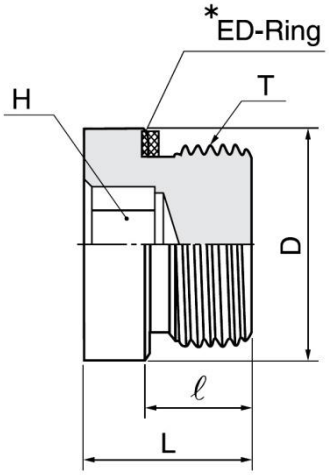

Part No.		T	T	D	H	L	ℓ	PN, bar	
GE	ME	G(PF)	M(Metric)					C	SS
EVSTI-01GE	EVSTI-10ME	1/8"	M10 x 1.0	14.0	5	12.0	8	400	400
-	EVSTI-12ME	-	M12 x 1.5	17.0	6	17.0	12	400	400
EVSTI-02GE	EVSTI-14ME	1/4"	M14 x 1.5	19.0	6	17.0	12	400	400
EVSTI-03GE	EVSTI-16ME	3/8"	M16 x 1.5	22.0	8	17.0	12	400	400
-	EVSTI-18ME	-	M18 x 1.5	23.9	8	17.0	12	400	400
-	EVSTI-20ME	-	M20 x 1.5	25.9	10	19.0	14	400	400
EVSTI-04GE	EVSTI-22ME	1/2"	M22 x 1.2	27.0	10	19.0	14	400	400
-	EVSTI-26ME	-	M26 x 1.5	31.9	12	21.0	16	400	400
EVSTI-06GE	EVSTI-27ME	3/4"	M27 x 2.0	32.0	12	21.0	16	400	400
EVSTI-08GE	EVSTI-33ME	1"	M33 x 2.0	39.9	17	22.5	16	400	400
EVSTI-10GE	EVSTI-42ME	1 1/4"	M42 x 2.0	49.9	22	22.5	16	315	315
EVSTI-12GE	EVSTI-48ME	1 1/2"	M48 x 2.0	55.0	24	22.5	16	315	315

Blanking Plugs with O-Ring

EVSTI-MF

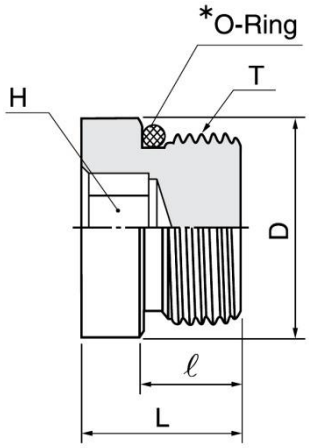

Part No.	T	D	H	L	ℓ	PN, bar
	M(Metric)					C
EVSTI-10MF	M10 x 1.0	13	5	14.0	10.0	630
EVSTI-12MF	M12 x 1.5	17	6	16.5	11.5	630
EVSTI-14MF	M14 x 1.5	19	6	16.5	11.5	630
EVSTI-16MF	M16 x 1.5	21	6	18.0	13.0	630
EVSTI-18MF	M18 x 1.5	23	8	19.5	14.5	630
EVSTI-22MF	M22 x 1.5	27	10	20.5	15.5	630
EVSTI-26MF	M26 x 1.5	31	12	21.0	16.0	630
EVSTI-27MF	M27 x 2.0	32	12	24.0	19.0	400
EVSTI-33MF	M33 x 2.0	38	17	25.5	19.0	400
EVSTI-42MF	M42 x 2.0	48	22	26.0	19.5	400

Tube Port Plug with O-Ring

EVKA

Plugs Up Tube Port

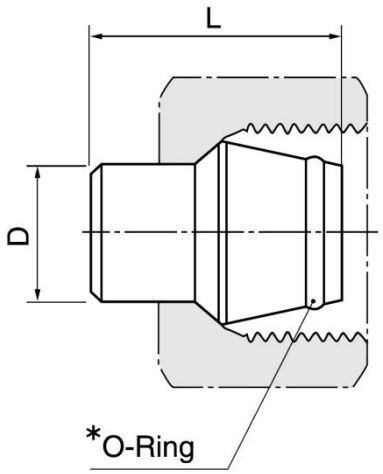

Series	Part No.	Tube O.D	L	PN, bar		
		D		C	SS	B
L/S	EVKA-06L/S	6	18.5	500	315	200
	EVKA-08L/S	8	18.5	500	315	200
	EVKA-10L/S	10	20.0	500	315	200
	EVKA-12L/S	12	20.5	400	315	200
L	EVKA-15L	15	20.5	400	315	200
	EVKA-18L	18	22.5	400	315	200
	EVKA-22L	22	25.0	250	160	100
	EVKA-28L	28	25.5	250	160	100
	EVKA-35L	35	30.0	250	160	100
	EVKA-42L	42	30.0	250	160	100
S	EVKA-14S	14	22.5	630	630	400
	EVKA-16S	16	23.5	630	400	250
	EVKA-20S	20	28.5	420	400	250
	EVKA-25S	25	29.0	420	400	250
	EVKA-30S	30	30.5	420	400	250
	EVKA-38S	38	33.0	420	315	200

Tube Cap

ECA

Plugs Up Tube End

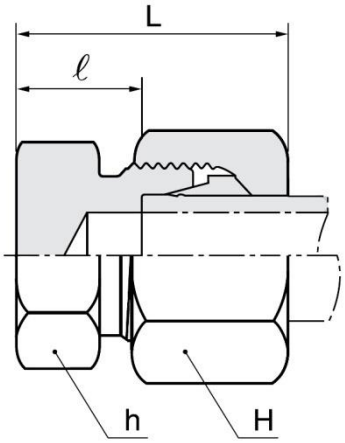

Series	Part No.	Tube O.D.	H	h	L	ℓ
L PN 315	ECA-06L	6	14	12	22	7.0
	ECA-08L	8	17	14	23	8.0
	ECA-10L	10	19	17	24	9.0
	ECA-12L	12	22	19	25	10.0
	ECA-15L	15	27	24	26	11.0
	ECA-18L	18	32	27	28	11.5
PN 160	ECA-22L	22	36	32	30	13.5
	ECA-28L	28	41	41	31	14.5
	ECA-35L	35	50	46	36	14.5
	ECA-42L	42	60	55	39	16.0
S PN 630	ECA-06S	6	17	14	26	11.0
	ECA-08S	8	19	17	28	13.0
	ECA-10S	10	22	19	29	12.5
	ECA-12S	12	24	22	31	14.5
	ECA-14S	14	27	24	34	16.0
PN 400	ECA-16S	16	30	27	34	15.5
	ECA-20S	20	36	32	39	17.5
	ECA-25S	25	46	41	44	20.0
	ECA-30S	30	50	46	47	20.5
PN 315	ECA-38S	38	60	55	54	23.0

Male Female Adapter (BSPP Parallel)

EMFAD-GB

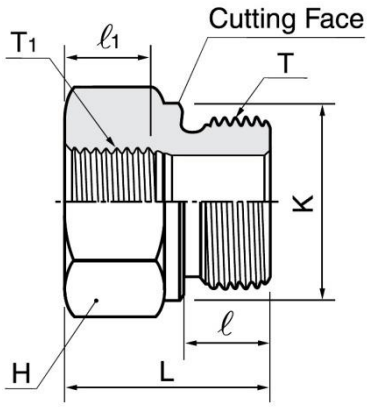

From B stud end

Part No.	H	K	L	ℓ	ℓ1	Male Stud-T	Female Stud-T1	PN, bar		
						G(PF)	G(PF)	C	SS	B
EMFAD03-01GB	22	22	22.5	12	8	3/8"	1/8"	400	400	250
EMFAD04-01GB	27	26	24.0	14	8	1/2"	1/8"	400	400	250
EMFAD04-02GB	27	26	24.0	14	12	1/2"	1/4"	315	315	200
EMFAD06-02GB	32	32	26.0	16	12	3/4"	1/4"	315	315	200
EMFAD06-03GB	32	32	26.0	16	12	3/4"	3/8"	315	315	200
EMFAD08-02GB	41	39	29.0	18	12	1"	1/4"	315	315	-
EMFAD08-03GB	41	39	29.0	18	12	1"	3/8"	315	315	200
EMFAD08-04GB	41	39	29.0	18	14	1"	1/2"	315	315	200
EMFAD10-04GB	50	49	32.0	20	14	1 1/4"	1/2"	160	160	100
EMFAD10-06GB	50	49	32.0	20	16	1 1/4"	3/4"	160	160	100
EMFAD12-04GB	55	55	36.0	22	14	1 1/2"	1/2"	160	160	100
EMFAD12-06GB	55	55	36.0	22	16	1 1/2"	3/4"	160	160	100
EMFAD12-08GB	55	55	36.0	22	18	1 1/2"	1"	160	160	100

Male Female Adapter (BSPP Parallel)

EMFAE-GB

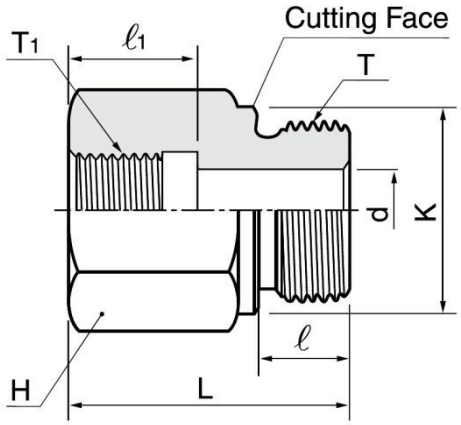

From B stud end

Part No.	d	H	K	L	ℓ	ℓ1	Male Stud-T	Female Stud-T1	PN, bar		
							G(PF)	G(PF)	C	SS	B
EMFAE01-02GB	4	19	14	31	8	17.0	1/8"	1/4"	400	400	250
EMFAE01-03GB	4	24	14	32	8	17.0	1/8"	3/8"	400	400	250
EMFAE02-01GB	5	19	18	28	12	12.0	1/4"	1/8"	400	400	250
EMFAE02-03GB	5	24	18	36	12	17.0	1/4"	3/8"	400	400	250
EMFAE02-04GB	5	30	18	40	12	20.0	1/4"	1/2"	400	400	250
EMFAE02-06GB	5	36	18	43	12	22.0	1/4"	3/4"	315	315	200
EMFAE03-02GB	8	22	22	36	12	17.0	3/8"	1/4"	400	400	250
EMFAE03-04GB	8	30	22	41	12	20.0	3/8"	1/2"	400	400	250
EMFAE03-06GB	8	36	22	44	12	22.0	3/8"	3/4"	315	315	200
EMFAE04-03GB	12	27	26	36	14	17.0	1/2"	3/8"	315	315	200
EMFAE04-06GB	12	36	26	46	14	22.0	1/2"	3/4"	315	315	200
EMFAE04-08GB	12	41	26	49	14	24.5	1/2"	1"	315	315	200
EMFAE04-10GB	10	55	26	53	14	26.5	1/2"	1 1/4"	160	160	-
EMFAE06-04GB	16	32	32	41	16	20.0	3/4"	1/2"	315	315	200
EMFAE06-08GB	16	41	32	51	16	24.5	3/4"	1"	315	315	200
EMFAE06-10GB	16	55	32	55	16	26.5	3/4"	1 1/4"	160	160	-
EMFAE06-12GB	16	60	32	57	16	28.5	3/4"	1 1/2"	160	160	-
EMFAE08-06GB	20	41	39	47	18	22.0	1"	3/4"	315	315	200
EMFAE08-10GB	20	55	39	57	18	26.5	1"	1 1/4"	160	160	100
EMFAE08-12GB	20	60	39	59	18	28.5	1"	1 1/2"	160	160	100
EMFAE10-08GB	25	50	49	52	20	24.5	1 1/4"	1"	160	160	100
EMFAE10-12GB	25	60	49	60	20	28.5	1 1/4"	1 1/2"	160	160	100
EMFAE12-10GB	32	55	55	58	22	26.5	1 1/2"	1 1/4"	160	160	100
EMFAE16-12GB	40	70	68	62	24	28.5	2"	1 1/2"	160	-	-

Male Female Adapter (BSPP Parallel)
with ED-Ring

EMFAD-GE

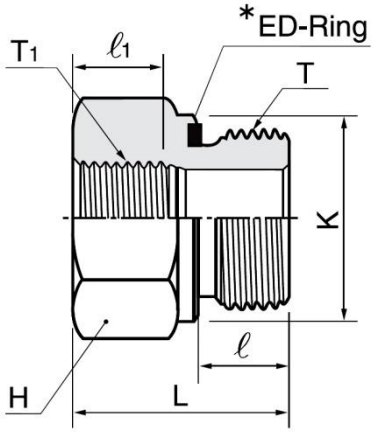

From E stud end

Part No.	H	K	L	ℓ	ℓ1	Male Stud-T	Female Stud-T1	PN, bar	
						G(PF)	G(PF)	C	SS
EMFAD03GE-01G	22	22	22.5	12	8	3/8"	1/8"	400	400
EMFAD04GE-01G	27	26	24.0	14	8	1/2"	1/8"	400	400
EMFAD04GE-02G	27	26	24.0	14	12	1/2"	1/4"	400	400
EMFAD06GE-02G	32	32	26.0	16	12	3/4"	1/4"	315	315
EMFAD06GE-03G	32	32	26.0	16	12	3/4"	3/8"	315	315
EMFAD08GE-02G	41	39	29.0	18	12	1"	1/4"	315	315
EMFAD08GE-03G	41	39	29.0	18	12	1"	3/8"	315	315
EMFAD08GE-04G	41	39	29.0	18	14	1"	1/2"	315	315
EMFAD10GE-04G	50	49	32.0	20	14	1 1/4"	1/2"	315	315
EMFAD10GE-06G	50	49	32.0	20	16	1 1/4"	3/4"	315	315
EMFAD12GE-04G	55	55	36.0	22	14	1 1/2"	1/2"	250	250
EMFAD12GE-06G	55	55	36.0	22	16	1 1/2"	3/4"	250	250
EMFAD12GE-08G	55	55	36.0	22	18	1 1/2"	1"	250	250

Male Female Adapter (BSPP Parallel)
with ED-Ring

EMFAE-GE

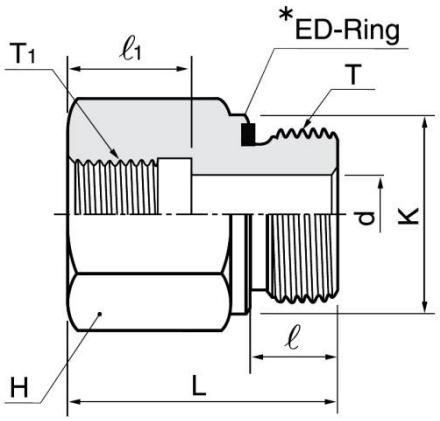

From E stud end

Part No.	d	H	K	L	ℓ	ℓ1	Male Stud-T	Female Stud-T1	PN, bar	
							G(PF)	G(PF)	C	SS
EMFAE01GE-02G	4	19	14	31	8	17.0	1/8"	1/4"	400	400
EMFAE01GE-03G	4	24	14	32	8	17.0	1/8"	3/8"	400	400
EMFAE02GE-01G	5	19	18	28	12	12.0	1/4"	1/8"	400	400
EMFAE02GE-03G	5	24	18	36	12	17.0	1/4"	3/8"	400	400
EMFAE02GE-04G	5	30	18	40	12	20.0	1/4"	1/2"	400	400
EMFAE02GE-06G	5	36	18	43	12	22.0	1/4"	3/4"	400	400
EMFAE03GE-02G	8	22	22	36	12	17.0	3/8"	1/4"	400	400
EMFAE03GE-04G	8	30	22	41	12	20.0	3/8"	1/2"	400	400
EMFAE03GE-06G	8	36	22	44	12	22.0	3/8"	3/4"	315	315
EMFAE04GE-03G	12	27	26	36	14	17.0	1/2"	3/8"	400	400
EMFAE04GE-06G	12	36	26	46	14	22.0	1/2"	3/4"	315	315
EMFAE04GE-08G	12	41	26	49	14	24.5	1/2"	1"	315	315
EMFAE04GE-10G	10	55	26	53	14	26.5	1/2"	1 1/4"	315	315
EMFAE06GE-04G	16	32	32	41	16	20.0	3/4"	1/2"	315	315
EMFAE06GE-08G	16	41	32	51	16	24.5	3/4"	1"	315	315
EMFAE06GE-10G	16	55	32	55	16	26.5	3/4"	1 1/4"	315	315
EMFAE06GE-12G	16	60	32	57	16	28.5	3/4"	1 1/2"	250	250
EMFAE08GE-06G	20	41	39	47	18	22.0	1"	3/4"	315	315
EMFAE08GE-10G	20	55	39	57	18	26.5	1"	1 1/4"	315	315
EMFAE08GE-12G	20	60	39	59	18	28.5	1"	1 1/2"	250	250
EMFAE10GE-08G	25	50	49	52	20	24.5	1 1/4"	1"	315	315
EMFAE10GE-12G	25	60	49	60	20	28.5	1 1/4"	1 1/2"	250	250
EMFAE12GE-10G	32	55	55	58	22	26.5	1 1/2"	1 1/4"	250	250
EMFAE16GE-12G	40	70	68	62	24	28.5	2"	1 1/2"	160	-

Banjo Fitting (BSPP) with EKA Ring

EBA-G

Connects Tube to Female Port

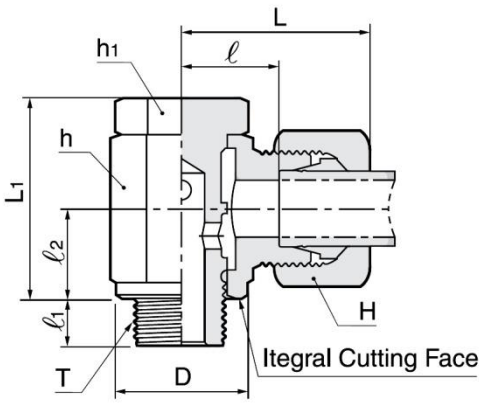

For Tube O.D up to 15mm

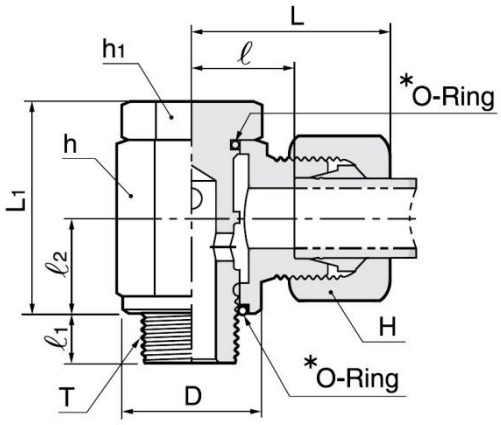

For Tube O.D 16mm and larger

Series	Part No.	Tube O.D.	D	H	h	h1	L	L1	ℓ	ℓ1	ℓ2	T G(PF)	PN, bar C
L	EBA06L-01G	6	14.5	14	14	14	25	21.0	10.5	6	10.0	1/8"	160
	EBA08L-02G	8	18.5	17	19	19	28	27.0	13.0	9	13.0	1/4"	160
	EBA10L-02G	10	18.5	19	19	19	29	27.0	14.0	9	13.0	1/4"	160
	EBA12L-03G	12	22.5	22	22	22	30	32.0	15.5	9	15.0	3/8"	100
	EBA15L-04G	15	26.5	27	27	27	34	37.5	19.0	11	18.0	1/2"	100
	EBA18L-04G	18	26	32	30	27	37	44.0	20.5	11	21.5	1/2"	100
	EBA22L-06G	22	32	36	36	32	42	49.0	25.5	13	24.0	3/4"	100
S	EBA06S-02G	6	18.5	17	19	19	30	27.0	15.0	9	13.0	1/4"	160
	EBA08S-02G	8	18.5	19	19	19	30	27.0	15.0	9	13.0	1/4"	160
	EBA10S-03G	10	22.5	22	22	22	32	32.0	16.0	9	15.0	3/8"	100
	EBA12S-03G	12	22.5	24	24	24	33	37.0	17.0	9	18.0	3/8"	100
	EBA14S-04G	14	26.5	27	27	27	38	37.0	20.0	11	18.0	1/2"	100
	EBA16S-04G	16	26	30	30	27	40	44.0	21.5	11	21.5	1/2"	100
	EBA20S-06G	20	32	36	36	32	46	49.0	24.5	13	24.0	3/4"	100

Banjo Fitting (Metric Parallel) with EKA Ring

EBA-M

Connects Tube to Female Port

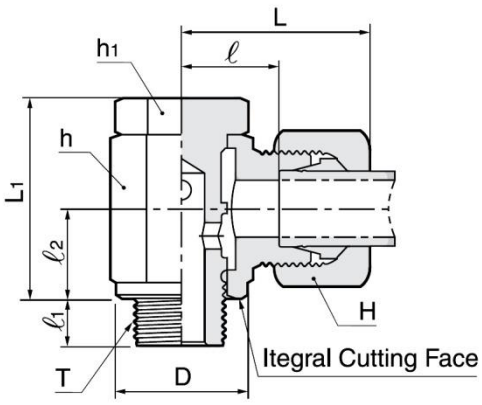

For Tube O.D up to 15mm

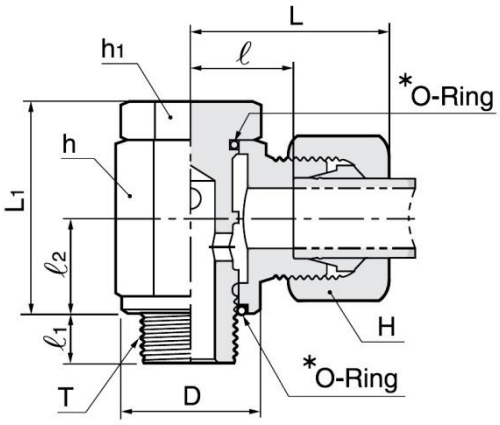

For Tube O.D 16mm and larger

Series	Part No.	Tube O.D.	D	H	h	h1	L	L1	ℓ	ℓ1	ℓ2	T M(Metric)	PN, bar C
L	EBA06L-10M	6	14.5	14	14	14	25	21.5	10.5	6	10.0	M10 x 1.0	160
	EBA08L-12M	8	17.5	17	17	17	27	25.0	12.0	9	12.0	M12 x 1.5	160
	EBA10L-14M	10	19.5	19	19	19	29	27.0	14.0	9	13.0	M14 x 1.5	160
	EBA12L-16M	12	21.5	22	22	22	30	32.0	15.5	9	15.0	M16 x 1.5	100
	EBA15L-18M	15	23.5	27	24	24	33	37.5	17.5	9	18.0	M18 x 1.5	100
	EBA18L-22M	18	27	32	30	27	37	44.0	20.5	11	21.5	M22 x 1.5	100
	EBA22L-26M	22	31	36	36	32	42	49.0	25.5	13	24.0	M26 x 1.5	100
S	EBA06S-12M	6	17.5	17	17	19	29	25.0	14.0	9	12.0	M12 x 1.5	100
	EBA08S-14M	8	19.5	19	19	19	30	27.0	15.0	9	13.0	M14 x 1.5	100
	EBA10S-16M	10	21.5	22	22	22	32	32.0	16.0	9	15.0	M16 x 1.5	100
	EBA12S-18M	12	23.5	24	24	24	33	37.0	17.0	9	18.0	M18 x 1.5	100
	EBA14S-20M	14	25.5	27	27	27	38	37.0	20.0	11	18.0	M20 x 1.5	100
	EBA16S-22M	16	27	30	30	27	40	44.0	21.5	11	21.5	M22 x 1.5	100
	EBA20S-27M	20	32	36	36	32	46	49.0	24.5	13	24.0	M27 x 2.0	100

High Pressure Banjo Fitting (BSPP) with EKA Ring

EBAH-G

Connects Tube to Female Port

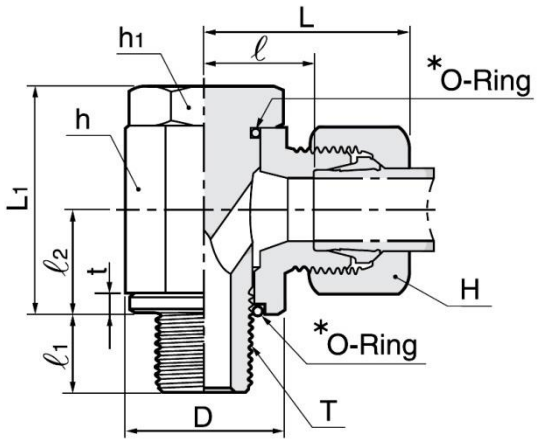

Series	Part No.	Tube O.D.	D	H	h	h1	L	L1	ℓ	ℓ1	ℓ2	t	T G(PF)	PN, bar		
														C	SS	B
L	EBAH06L-01G	6	14	14	17	17	27	24	12.0	8	10.5	2.5	1/8"	250	250	160
	EBAH08L-02G	8	18	17	22	19	29	30	14.5	12	14.0	3.0	1/4"	250	250	160
	EBAH10L-02G	10	18	19	22	19	30	30	15.5	12	14.0	3.0	1/4"	250	250	160
	EBAH12L-03G	12	22	22	27	24	33	36	18.0	12	16.5	3.0	3/8"	250	250	160
	EBAH15L-04G	15	26	27	32	30	37	45	21.5	14	21.5	4.5	1/2"	250	250	160
	EBAH18L-04G	18	26	32	32	30	37	45	21.0	14	21.5	4.5	1/2"	250	250	160
	EBAH22L-06G	22	32	36	41	36	44	53	27.5	16	24.0	3.5	3/4"	250	160	-
	EBAH28L-08G	28	39	41	50	46	49	66	32.0	18	30.5	3.5	1"	160	160	-
	EBAH35L-10G	35	49	50	60	55	58	76	36.0	20	35.5	3.5	1 1/4"	160	160	-
	EBAH42L-12G	42	55	60	70	60	63	87	40.5	22	40.5	3.5	1 1/2"	160	160	-
S	EBAH06S-02G	6	18	17	22	19	31	30	16.5	12	14.0	3.0	1/4"	315	315	200
	EBAH08S-02G	8	18	19	22	19	31	30	16.5	12	14.0	3.0	1/4"	315	315	200
	EBAH10S-03G	10	22	22	27	24	35	36	18.5	12	16.5	3.0	3/8"	315	315	200
	EBAH12S-03G	12	22	24	27	24	35	36	18.5	12	16.5	3.0	3/8"	315	315	200
	EBAH16S-04G	16	26	30	32	30	40	45	22.0	14	21.5	4.5	1/2"	315	315	-
	EBAH20S-06G	20	32	36	41	36	48	53	26.5	16	24.0	3.5	3/4"	160	160	-
	EBAH25S-08G	25	39	46	50	46	56	66	31.5	18	30.5	3.5	1"	160	160	-
	EBAH30S-10G	30	49	50	60	55	64	76	37.0	20	34.5	3.5	1 1/4"	160	160	-
	EBAH38S-12G	38	55	60	70	60	72	87	41.5	22	40.5	3.5	1 1/2"	160	160	-

High Pressure Banjo Fitting (Metric Parallel) with EKA Ring

EBAH-M

Connects Tube to Female Port

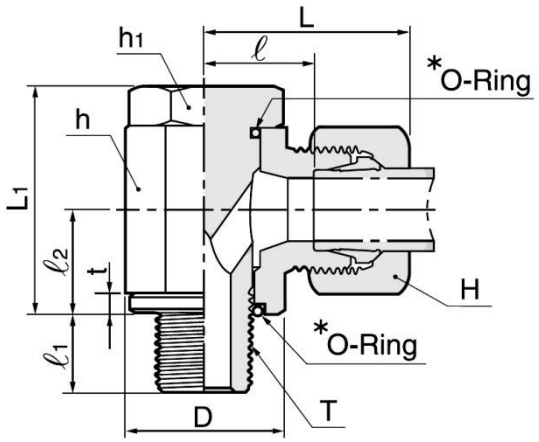

Series	Part No.	Tube O.D.	D	H	h	h1	L	L1	ℓ	ℓ1	ℓ2	t	T M(Metric)	PN, bar	
														C	SS
L	EBAH06L-10M	6	14	14	17	17	27	24.0	12.0	8	10.5	2.5	M10 x 1.0	250	250
	EBAH08L-12M	8	18	17	22	19	29	30.0	14.5	12	14.0	3.0	M12 x 1.5	250	250
	EBAH10L-14M	10	18	19	22	19	30	30.0	15.5	12	14.0	3.0	M14 x 1.5	250	250
	EBAH12L-16M	12	22	22	27	24	33	36.0	18.0	12	16.5	3.0	M16 x 1.5	250	250
	EBAH15L-18M	15	26	27	32	30	37	39.5	20.5	12	21.5	3.0	M18 x 1.5	250	250
	EBAH18L-22M	18	26	32	32	30	37	45.0	21.0	14	21.5	4.5	M22 x 1.5	250	250
	EBAH22L-26M	22	32	36	41	36	44	53.0	27.5	16	24.0	3.5	M26 x 1.5	160	160
	EBAH28L-33M	28	39	41	50	46	49	66.0	32.0	18	30.5	3.5	M33 x 2.0	160	160
	EBAH35L-42M	35	49	50	60	55	58	76.0	36.0	20	35.5	3.5	M42 x 2.0	160	160
	EBAH42L-48M	42	55	60	70	60	63	87.0	40.5	22	40.5	3.5	M48 x 2.0	160	160
S	EBAH06S-12M	6	18	17	22	19	31	30.0	16.5	12	14.0	3.0	M12 x 1.5	315	315
	EBAH08S-14M	8	18	19	22	19	31	30.0	16.5	12	14.0	3.0	M14 x 1.5	315	315
	EBAH10S-16M	10	22	22	27	24	35	36.0	18.5	12	16.5	3.0	M16 x 1.5	315	315
	EBAH12S-18M	12	22	24	27	24	35	39.5	20.0	12	16.5	3.0	M18 x 1.5	315	315
	EBAH16S-22M	16	26	30	32	30	40	45.0	22.0	14	21.5	4.5	M22 x 1.5	315	315
	EBAH20S-27M	20	32	36	41	36	48	53.0	26.5	16	24.0	3.5	M27 x 2.0	160	160
	EBAH25S-33M	25	39	46	50	46	56	66.0	31.5	18	30.5	3.5	M33 x 2.0	160	160
	EBAH30S-42M	30	49	50	60	55	64	76.0	37.0	20	34.5	3.5	M42 x 2.0	160	160
	EBAH38S-48M	38	55	60	70	60	72	87.0	41.5	22	40.5	3.5	M48 x 2.0	160	160

Tee High Pressure Banjo Fittings (BSPP) with EKA-Ring

EBTH-G

Connects Tube to Female Port

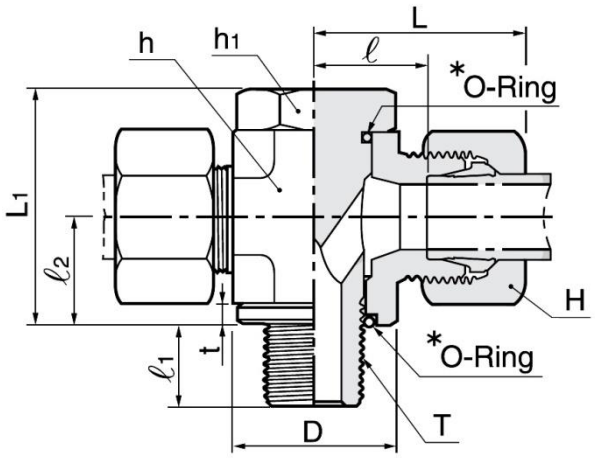

Series	Part No.	Tube O.D.	D	H	h	h1	L	L1	ℓ	ℓ1	ℓ2	t	T G(PF)	PN, bar	
														C	SS
L	EBTH06L-01G	6	14	14	17	17	27	24	12.0	8	10.5	2.5	1/8"	250	250
	EBTH08L-02G	8	18	17	22	19	29	30	14.5	12	14.0	3.0	1/4"	250	250
	EBTH10L-02G	10	18	19	22	19	30	30	15.5	12	14.0	3.0	1/4"	250	250
	EBTH12L-03G	12	22	22	27	24	33	36	18.0	12	16.5	3.0	3/8"	250	250
	EBTH15L-04G	15	26	27	32	30	37	45	21.5	14	21.5	4.5	1/2"	250	250
	EBTH18L-04G	18	26	32	32	30	37	45	21.0	14	21.5	4.5	1/2"	250	250
	EBTH22L-06G	22	32	36	41	36	44	53	27.5	16	24.0	3.5	3/4"	160	160
	EBTH28L-08G	28	39	41	50	46	49	66	32.0	18	30.5	3.5	1"	160	160
	EBTH35L-10G	35	49	50	60	55	58	76	36.0	20	35.5	3.5	1 1/4"	160	160
	EBTH42L-12G	42	55	60	70	60	63	87	40.5	22	40.5	3.5	1 1/2"	160	160
S	EBTH06S-03G	6	18	17	22	19	31	30	16.5	12	14.0	3.0	1/4"	315	315
	EBTH08S-02G	8	18	19	22	19	31	30	16.5	12	14.0	3.0	1/4"	315	315
	EBTH10S-03G	10	22	22	27	24	35	36	18.5	12	16.5	3.0	3/8"	315	315
	EBTH12S-03G	12	22	24	27	24	35	36	18.5	12	16.5	3.0	3/8"	315	315
	EBTH16S-04G	16	26	30	32	30	40	45	22.0	14	21.5	4.5	1/2"	315	315
	EBTH20S-06G	20	32	36	41	36	48	53	26.5	16	24.0	3.5	3/4"	160	160
	EBTH25S-08G	25	39	46	50	46	56	66	31.5	18	30.5	3.5	1"	160	160
	EBTH30S-10G	30	49	50	60	55	64	76	37.0	20	35.5	3.5	1 1/4"	160	160
	EBTH38S-12G	38	55	60	70	60	72	87	41.5	22	40.5	3.5	1 1/2"	160	160

Tee High Pressure Banjo Fittings (Metric Parallel) with EKA-Ring

EBTH-M

Connects Tube to Female Port

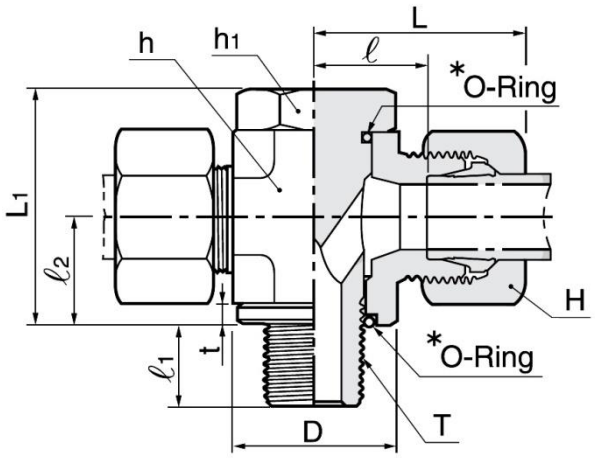

Series	Part No.	Tube O.D.	D	H	h	h1	L	L1	ℓ	ℓ1	ℓ2	t	T M(Metric)	PN, bar	
														C	SS
L	EBTH06L-10M	6	14	14	17	17	27	24	12.0	8	10.5	2.5	M10 x 1.0	250	250
	EBTH08L-12M	8	17	17	22	19	29	30	14.5	12	14.0	3.0	M12 x 1.5	250	250
	EBTH10L-14M	10	19	19	22	19	30	30	15.5	12	14.0	3.0	M14 x 1.5	250	250
	EBTH12L-16M	12	21	22	27	24	33	36	18.0	12	16.5	3.0	M16 x 1.5	250	250
	EBTH15L-18M	15	23	27	30	27	36	39.5	20.5	12	18.5	3.0	M18 x 1.5	250	250
	EBTH18L-22M	18	27	32	32	30	37	45	21.0	14	21.5	4.5	M22 x 1.5	250	250
	EBTH22L-26M	22	31	36	41	36	44	53	27.5	16	24.0	3.5	M26 x 1.5	160	160
	EBTH28L-33M	28	39	41	50	46	49	66	32.0	18	30.5	3.5	M33 x 2.0	160	160
	EBTH35L-42M	35	49	50	60	55	58	76	36.0	20	35.5	3.5	M42 x 2.0	160	160
	EBTH42L-48M	42	55	60	70	60	63	87	40.5	22	40.5	3.5	M48 x 2.0	160	160
S	EBTH06S-12M	6	17	17	22	19	31	30	16.5	12	14.0	3.0	M12 x 1.5	315	160
	EBTH08S-14M	8	19	19	22	19	31	30	16.5	12	14.0	3.0	M14 x 1.5	315	315
	EBTH10S-16M	10	21	22	27	24	35	36	18.5	12	16.5	3.0	M16 x 1.5	315	315
	EBTH12S-18M	12	23	24	30	24	35	39.5	20.0	12	18.5	3.0	M18 x 1.5	315	315
	EBTH16S-22M	16	27	30	32	30	36	45	22.0	14	21.5	4.5	M22 x 1.5	315	315
	EBTH20S-27M	20	32	36	41	36	48	53	26.5	16	24.0	3.5	M27 x 2.0	160	160
	EBTH25S-33M	25	39	46	50	46	56	66	31.5	18	30.5	3.5	M33 x 2.0	160	-
	EBTH30S-42M	30	49	50	60	55	64	76	37.0	20	35.5	3.5	M42 x 2.0	160	160
	EBTH38S-48M	38	55	60	70	60	72	87	41.5	22	40.5	3.5	M48 x 2.0	160	160

Sealing Ring

EKA

for EBA/EBAH/EBTH

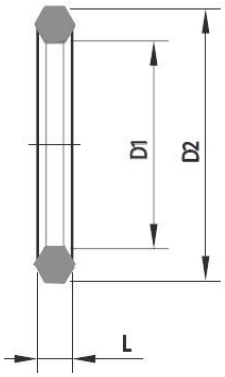

Part No.	External Thread	D1	D2	L1
EKA-01G	PF 1/8	9.8	14	2.5
EKA-02G	PF 1/4	13.3	18	3.0
EKA-03G	PF 3/8	16.8	22	3.0
EKA-04G	PF 1/2	21.1	26	4.5
EKA-06G	PF 3/4	26.6	32	3.5
EKA-08G	PF 1	33.4	39	3.5
EKA-10G	PF 1 1/4	42.1	49	3.5
EKA-12G	PF 1 1/2	48.1	55	3.5

EKA-10M	M10 x 1.0	10.1	14	3.0
EKA-12M	M12 x 1.5	12.1	17	3.0
EKA-14M	M14 x 1.5	14.1	19	3.0
EKA-16M	M16 x 1.5	16.1	21	3.0
EKA-18M	M18 x 1.5	18.1	23	3.0
EKA-20M	M20 x 1.5	20.1	25	3.0
EKA-22M	M22 x 1.5	22.1	27	4.5
EKA-26M	M26 x 1.5	26.1	31	3.5
EKA-27M	M27 x 2.0	27.1	32	3.5
EKA-33M	M33 x 2.0	33.1	39	3.5
EKA-42M	M42 x 2.0	42.1	49	3.5
EKA-48M	M48 x 2.0	48.1	55	3.5

Sealing Ring

EKAZ

for EBAT/EBTT

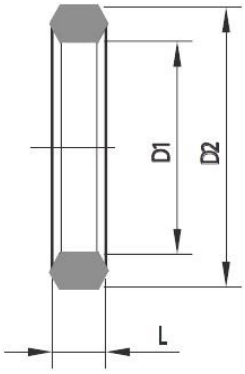

Part No.	External Thread	D1	D2	L
EKAZ-01G	PF 1/8	9.8	14	3.2
EKAZ-02G	PF 1/4	13.3	18	4.5
EKAZ-03G	PF 3/8	16.8	22	4.5
EKAZ-04G	PF 1/2	21.1	26	5.0
EKAZ-06G	PF 3/4	26.6	32	5.0
EKAZ-08G	PF 1	33.4	39	6.0
EKAZ-10G	PF 1 1/4	42.1	49	6.5
EKAZ-12G	PF 1 1/2	48.1	55	6.5

EKAZ-10M	M10 x 1.0	10.1	14	3.2
EKAZ-12M	M12 x 1.5	12.1	17	4.2
EKAZ-14M	M14 x 1.5	14.1	19	4.5
EKAZ-16M	M16 x 1.5	16.1	21	4.5
EKAZ-18M	M18 x 1.5	18.1	23	4.5
EKAZ-20M	M20 x 1.5	20.1	25	4.5
EKAZ-22M	M22 x 1.5	22.1	27	4.5
EKAZ-26M	M26 x 1.5	26.1	31	4.5
EKAZ-27M	M27 x 2.0	27.1	32	5.0
EKAZ-33M	M33 x 2.0	33.1	39	6.0
EKAZ-42M	M42 x 2.0	42.1	49	6.5
EKAZ-48M	M48 x 2.0	48.1	55	6.5

Test Coupling with M16 connection

EEMA3

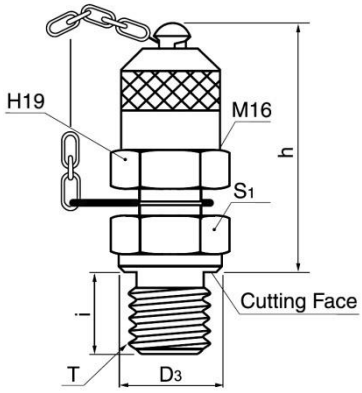

From B stud end standard
(From E stud end available)

Part No.	D3	h	i	S1	T	PN, bar
						C
EEMA3-01GB	14	36	8	17	PF 1/8	400
EEMA3-02GB	18	36	10	19	PF 1/4	400
EEMA3-03GB	22	36	12	22	PF 3/8	400
EEMA3-04GB	26	36	14	27	PF 1/2	400
EEMA3-10MB	14	36	8	17	M10 x 1.0	400
EEMA3-12MB	17	36	12	17	M12 x 1.5	400
EEMA3-14MB	19	36	12	19	M14 x 1.5	400
EEMA3-16MB	21	36	12	22	M16 x 1.5	400

Tee Test Coupling with M16 connection

EEMA3T

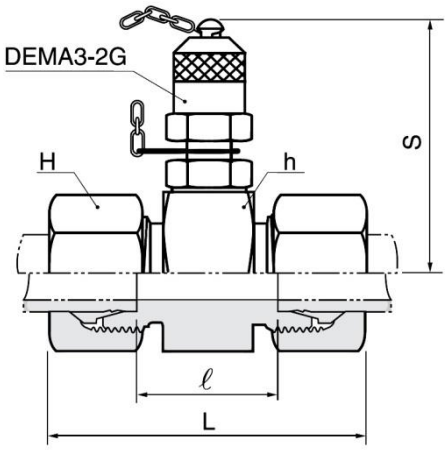

Series	Part No.	Tube O.D.	H	h	L	ℓ	S	PN, bar	
								C	SS
L	EEMA3T-06L	6	14	24	50	20.5	45	315	315
	EEMA3T-08L	8	17	24	50	20.5	45	315	315
	EEMA3T-10L	10	19	24	52	22.5	45	315	315
	EEMA3T-12L	12	22	24	52	22.5	45	315	315
	EEMA3T-15L	15	27	30	55	24.5	48	315	315
	EEMA3T-18L	18	32	32	56	23.5	49	315	315
	EEMA3T-22L	22	36	36	60	27.5	51	160	160
	EEMA3T-28L	28	41	41	61	27.5	53	160	160
	EEMA3T-35L	35	50	46	69	25.5	56	160	160
	EEMA3T-42L	42	60	55	70	24.5	60	160	160
S	EEMA3T-06S	6	17	24	54	24.5	45	630	630
	EEMA3T-08S	8	19	24	54	24.5	45	630	630
	EEMA3T-10S	10	22	24	56	23.5	45	630	630
	EEMA3T-12S	12	24	24	56	23.5	45	630	630
	EEMA3T-14S	14	27	27	62	26.5	46	630	630
	EEMA3T-16S	16	30	30	62	25.5	48	400	400
	EEMA3T-20S	20	36	36	69	25.5	5	400	400
	EEMA3T-25S	25	46	41	75	26.5	53	400	400
	EEMA3T-30S	30	50	46	81	27.5	56	400	400
	EEMA3T-38S	38	60	55	90	29.0	60	315	315

ED-Ring

9PE

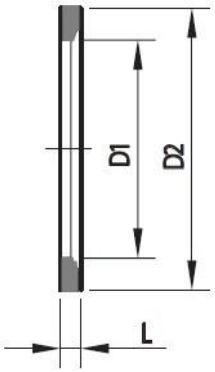

Part No.	For Male Thread		D1	D2	L
	Metric	G(PF)			
9PE-M8-BN	M8 x1.0	-	6.5	9.9	1.0
9PE-01G-BN	M10 x 1.0	PF 1/8	8.4	11.9	1.0
9PE-M12-BN	M12 x 1.5	-	9.8	14.4	1.5
9PE-02G-BN	M14 x 1.5	PF 1/4	11.6	16.5	1.5
9PE-M16-BN	M16 x 1.5	-	13.8	18.9	1.5
9PE-03G-BN	-	PF 3/8	14.7	18.9	1.5
9PE-M18-BN	M18 x 1.5	-	15.7	20.9	1.5
9PE-M20-BN	M20 x 1.5	-	17.8	22.9	1.5
9PE-04G-BN	-	PF 1/2	18.5	23.9	1.5
9PE-M22-BN	M22 x 1.5	-	19.6	24.3	1.5
9PE-06G-BN	M26 x 1.5	PF 3/4	23.9	29.2	1.5
9PE-M27-BN	M27 x 2.0	PF 3/4	23.9	29.2	1.5
9PE-08G-BN	M33 x 2.0	PF 1	29.7	35.7	2.0
9PE-10G-BN	M42 x 2.0	PF 1 1/4	38.8	45.8	2.0
9PE-12G-BN	M48 x 2.0	PF 1 1/2	44.7	50.7	2.0

O-Ring

9PO

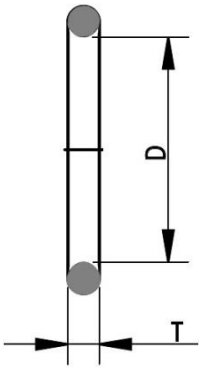

Part No.	D	T
9PO-DS06-BN	4.0	1.5
9PO-DS08-BN	6.0	1.5
9PO-DS10-BN	7.5	1.5
9PO-DS12-BN	9.0	1.5
9PO-DS14-BN	10.0	2.0
9PO-DS16-BN	12.0	2.0
9PO-DS18-BN	15.0	2.0
9PO-DS20-BN	16.3	2.4
9PO-DS22-BN	20.0	2.0
9PO-DS25-BN	20.3	2.4
9PO-DS28-BN	26.0	2.0
9PO-DS30-BN	25.3	2.4
9PO-DS35-BN	32.0	2.5
9PO-DS38-BN	33.3	2.4
9PO-DS42-BN	38.0	2.5

Nut / Cutting Ring / Tube Port Dimension

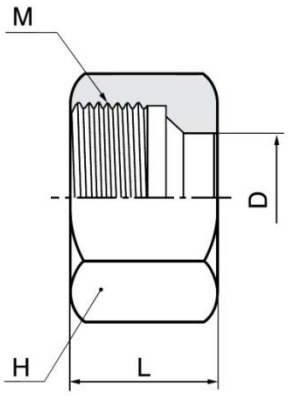

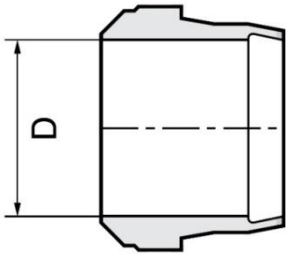

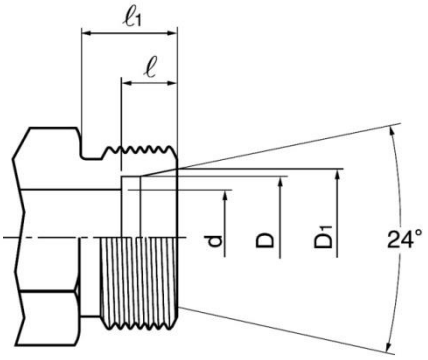

Nut EN **Cutting Ring ES** **Tube Port Dimension**

Series	Part No.		Tube O.D.	DN Size	D	D1	d	H	L	M	ℓ	ℓ1
	NUT	Cutting Ring										
LL	EN-04LL	ES-04LL	4	3	4	5.0	3	10	11.5	M 8 x 1.0	4.0	8
	EN-06LL	ES-06LL	6	4	6	7.5	5	12	12.0	M 10 x 1.0	5.5	8
	EN-08LL	ES-08LL	8	6	8	9.5	6	14	12.5	M 12 x 1.0	5.5	9
	EN-10LL	ES-10LL	10	8	10	11.5	8	17	12.5	M 14 x 1.0	6.0	9
	EN-12LL	ES-12LL	12	10	12	13.5	10	19	13.0	M 16 x 1.0	6.0	9
L	EN-06L	ES-06L	6	4	6	8.1	4	14	15.0	M 12 x 1.5	7.0	10
	EN-08L	ES-08L	8	6	8	10.1	6	17	15.0	M 14 x 1.5	7.0	10
	EN-10L	ES-10L	10	8	10	12.3	8	19	16.0	M 16 x 1.5	7.0	11
	EN-12L	ES-12L	12	10	12	14.3	10	22	16.0	M 18 x 1.5	7.0	11
	EN-15L	ES-15L	15	12	15	17.3	12	27	17.5	M 22 x 1.5	7.0	12
	EN-18L	ES-18L	18	16	18	20.3	15	32	18.0	M 26 x 1.5	7.5	12
	EN-22L	ES-22L	22	20	22	24.3	19	36	20.5	M 30 x 2.0	7.5	14
	EN-28L	ES-28L	28	25	28	30.3	24	41	21.0	M 36 x 2.0	7.5	14
	EN-35L	ES-35L	35	32	35	38.0	30	50	24.0	M 45 x 2.0	10.5	16
	EN-42L	ES-42L	42	40	42	45.0	36	60	24.0	M 52 x 2.0	11.0	16
S	EN-06S	ES-06S	6	3	6	8.1	4	17	16.5	M 14 x 1.5	7.0	12
	EN-08S	ES-08S	8	4	8	10.1	5	19	16.5	M 16 x 1.5	7.0	12
	EN-10S	ES-10S	10	6	10	12.3	7	22	17.5	M 18 x 1.5	7.5	12
	EN-12S	ES-12S	12	8	12	14.3	8	24	18.0	M 20 x 1.5	7.5	12
	EN-14S	ES-14S	14	10	14	16.3	10	27	20.5	M 22 x 1.5	8.0	14
	EN-16S	ES-16S	16	12	16	18.3	12	30	21.0	M 24 x 1.5	8.5	14
	EN-20S	ES-20S	20	16	20	22.9	16	36	24.0	M 30 x 2.0	10.5	16
	EN-25S	ES-25S	25	20	25	27.9	20	46	27.0	M 36 x 2.0	12.0	18
	EN-30S	ES-30S	30	25	30	33.0	25	50	29.5	M 42 x 2.0	13.5	20
	EN-38S	ES-38S	38	32	38	41.0	32	60	32.5	M 52 x 2.0	16.0	22

RFS Hydraulics Pte Ltd

Address : 1781 Geylang Bahru, #01-03, Singapore 339707
Telephone Number : +65 6294 1700
Email Address : enquiry@rfshydraulics.com
Website : www.rfshydraulics.id
Business Registration Number : 201706937M
Country of Registration : Singapore

Conditions of Use of Catalogue:

The information in the catalogue are not binding and in order to improve distribution, RFS Hydraulics Sdn Bhd reserves the right to make any change including size and pressure ratings considered necessary at any time and without prior notice.
According to the copyright and the civil law, any reproduction (also partial) of figures and texts of this catalogue by means of electronic, mechanical, photocopies, microfilms, recordings or other is forbidden without RFS Hydraulics Sdn Bhd's authorization.
Catalogue Version: 2020

© 2020 RFS Hydraulics Sdn Bhd. All rights reserved.